MACHINE DESIGN

NewtonDesk.com

NewtonDesk.com

Design - is a process plan to satisfy a human need.
It is a mechanism to convert an idea into reality
It is a solution to the problem.

Machine - A m/c is a combination of resistant bodies with successfully constrained motion (relative motion) to other form of energy into mechanical energy.
OR
To transmit and modify the available energy to do some useful work.

Machine design involve the selection of suitable material and optimum dimentions to withstand the load without failure.

Loads - Externally applied force or moment acting on the member

loads
- Static
- Variable load

Static loads — Conb. w.r.to time:
- Magnitude
- Direction
- Point of application

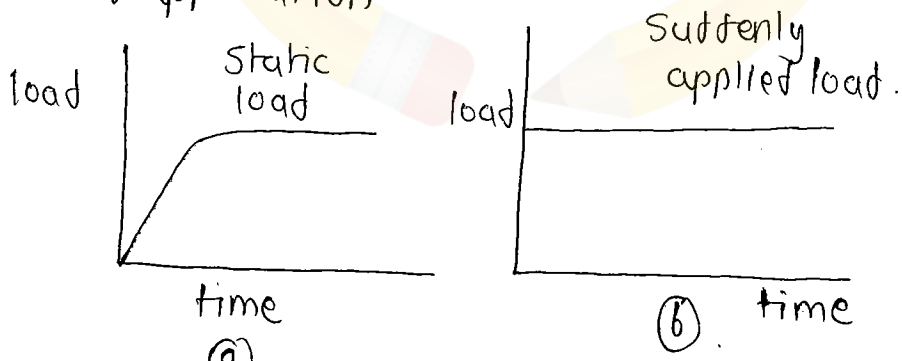

(a) (b)

Gradually applied load can also called as static load.

NewtonDesk.com

① Magnitude changes - magnitude is fluxituating but direction remain same

Ex:-

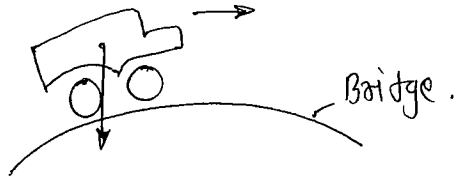

the direction of force is cont. but magnitude is changing while vehicle crossing the bridge.

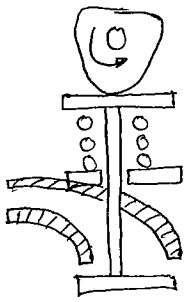

valve spring.

② Direction Changes - Constant magnitude

Ex:- Rack pinion., gear m/c sm.

A rotating shaft carrying a const. bending movement.

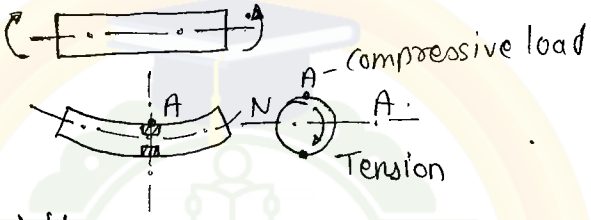

$$\sigma_b = \frac{M}{I} \times y.$$

$$\sigma_b = \frac{32M}{\pi d^3}.$$

connecting rod = tensile load ≠ comp load

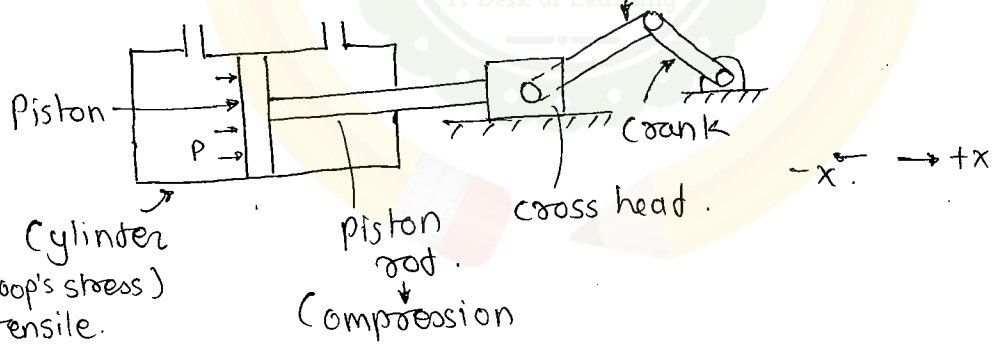

Pressure P

$$\vec{F} = \text{Pres} \times \text{Area}$$

$$= P \times \pi/4\, D^2.$$

$$\overleftarrow{F} = P \times \frac{\pi}{4}(D^2 - d^2)$$

$$d << D.$$

$$\vec{F} = \overleftarrow{F}$$

Piston rod = $\overleftarrow{F}$ - tensile load $\vec{F}$ - comp. load.

hence piston rod come under this catagory.

NewtonDesk.com

③ Point of application.

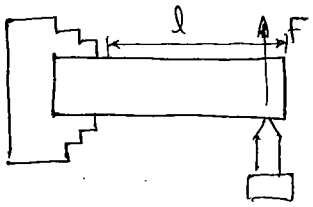

$M_{max} = F \times l$

$M_{min} = F \times 0$

Stress (σ)

$\sigma_{centroidal\ axis} = \frac{load}{area} = \frac{F}{A}$

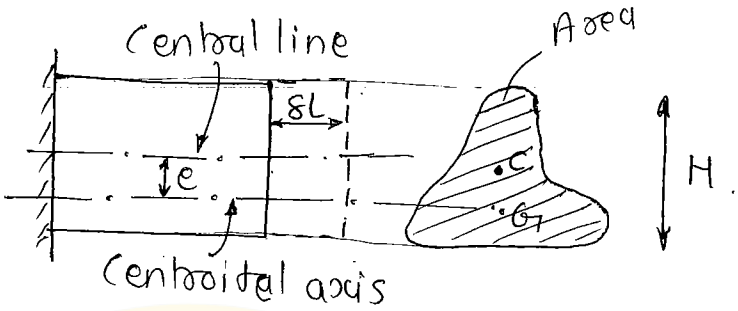

$\sigma_{central\ line} = \frac{F}{A} + \frac{M}{I} y$

Strain (ε)

$\varepsilon = \frac{\delta L}{L}$

Hook's law

$\sigma \propto \varepsilon$ (with in the proportional limit) (No elastic limit).

Stiffness (K)

$K = \frac{load}{deflection}$

$= \frac{F}{\frac{Fl}{AE}} = \frac{AE}{L}$.

Stress at a point.

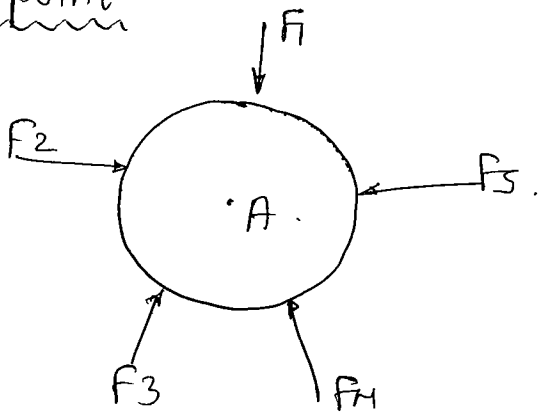

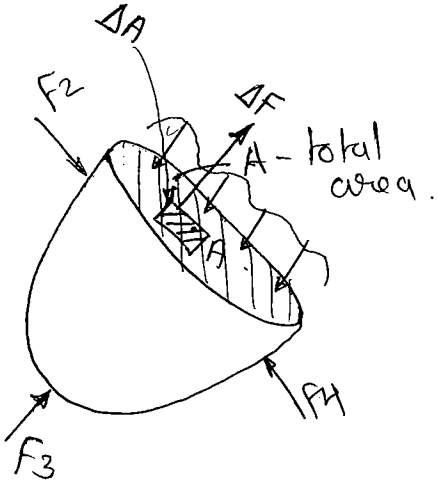

NewtonDesk.com

$$\sigma_t = \underset{\Delta A \to 0}{Lt} \frac{\Delta F}{\Delta A}$$

$$= \frac{dF}{dA}.$$

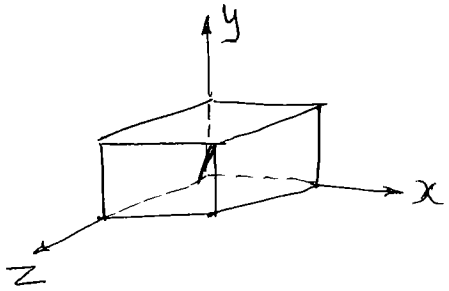

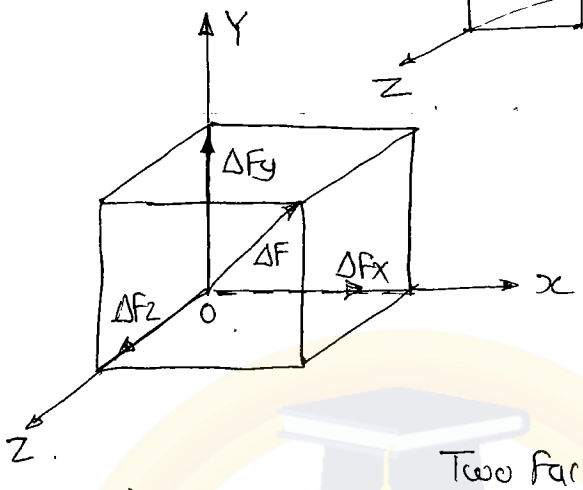

→ Force ⊥ⁿ to X axis

Two face are ⊥ⁿ to x axis.

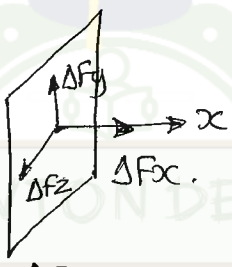

Tensor (vector quant) $\sigma_{xx} = \underset{\Delta A \to 0}{Lim} \frac{\Delta F_x}{\Delta A}$.

Force Normal to co-ordinate — Force direction

$$\sigma_{xy} = \underset{\Delta A \to 0}{Lim} \frac{\Delta F_y}{\Delta A}.$$

$$\sigma_{xz} = \underset{\Delta A \to 0}{lim} \frac{\Delta F_z}{\Delta A}.$$

→ Force ⊥ⁿ to Y axis (same).

" " " Z axis "

Stress tensor

Direct stress
Normal stresses. (volume change)

Distorsion Stress

$$\sigma = \begin{array}{c} x \\ y \\ z \end{array} \begin{bmatrix} \sigma_{xx} & \sigma_{xy} & \sigma_{xz} \\ \sigma_{yx} & \sigma_{yy} & \sigma_{yz} \\ \sigma_{zx} & \sigma_{zy} & \sigma_{zz} \end{bmatrix}$$

NewtonDesk.com

Normal stress – It changes the size (volume changes)
It is called as direct stress (No shape change)

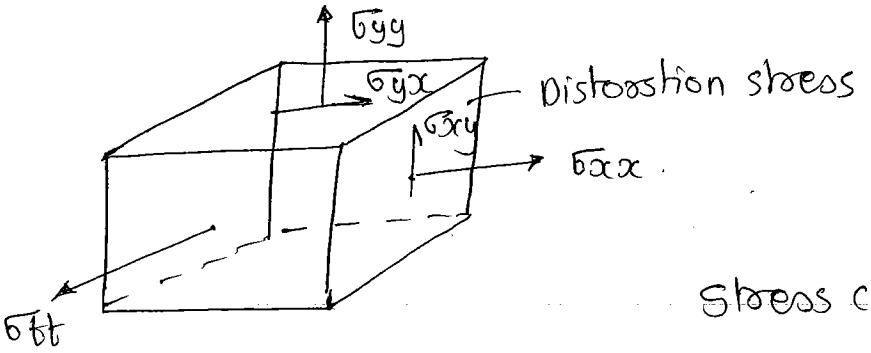

Stress component – 9.

$$\sigma = \begin{bmatrix} \sigma_{xx} & \tau_{xy} & \tau_{xz} \\ \sigma_{yx} & \sigma_{yy} & \tau_{yz} \\ \tau_{zx} & \tau_{zy} & \sigma_{zz} \end{bmatrix}$$

Complementary shear stress are

$\tau_{xy} = \tau_{yx}$.

$\tau_{yz} = \tau_{zy}$

$\tau_{zx} = \tau_{xz}$.

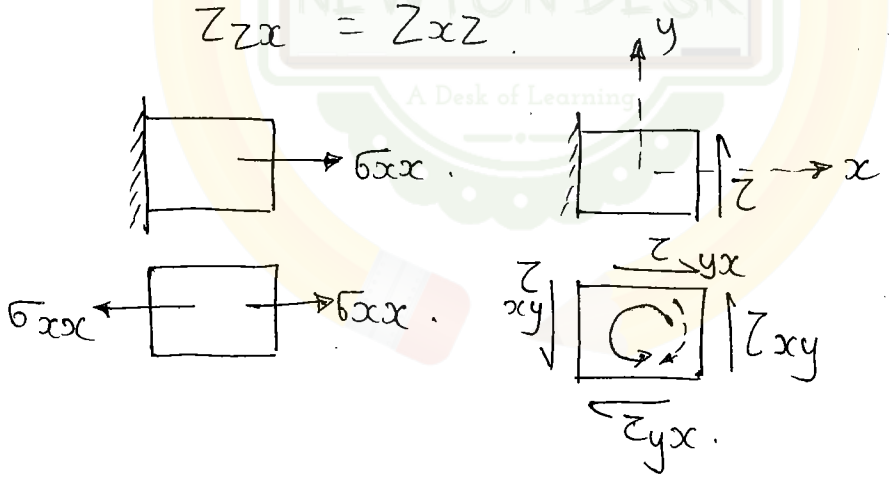

6 stress components are req to define the total stress at a point in the space.

σ_{xx} τ_{xy}
σ_{yy} τ_{yz}
σ_{zz} τ_{zx}

NewtonDesk.com

Two dimention stress. (Plane stress)

Ex:- ① Thin sheets (laminar)

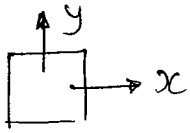

(thickness is very less)

② Thin cylindrical shell

σ_θ, σ_l and p (pressure) is neglected.

$$\sigma = \begin{bmatrix} \sigma_{xx} & \tau_{xy} \\ \sigma_{yx} & \sigma_{yy} \end{bmatrix}$$

3 stress compents are required to define the stress

σ_{xx}, σ_{yy}, $\tau_{xy} = \tau_{yx}$.

Principle Stress.

Principle plain – A plain carrying zero ~~principle~~ shear stress.

Principle Stress – The stress (normal) acting on the principle plain.

Principle palanes and stresses.

Principle plane.

zero shear stress { AB or CD $\sigma_1 = \sigma$
AD or BC $\sigma_2 = 0$.

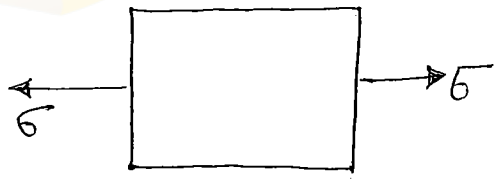

Principle plane.

AB or CD $\sigma_1 = \sigma_y$ Major

AD or BC $\sigma_2 = \sigma_x$ Minor

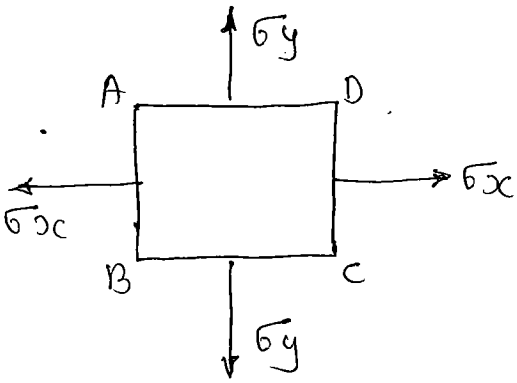

$\sigma_y > \sigma_x$.

Biaxial type

NewtonDesk.com

→

AB or CD $\quad \sigma_2 = \sigma_x$

AD or BC $\quad \sigma_1 = \sigma_y$

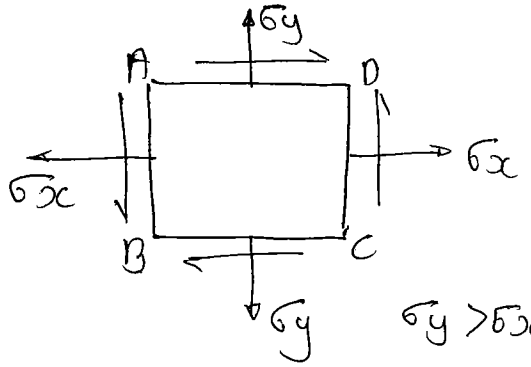

$\sigma_y > \sigma_x$.

→

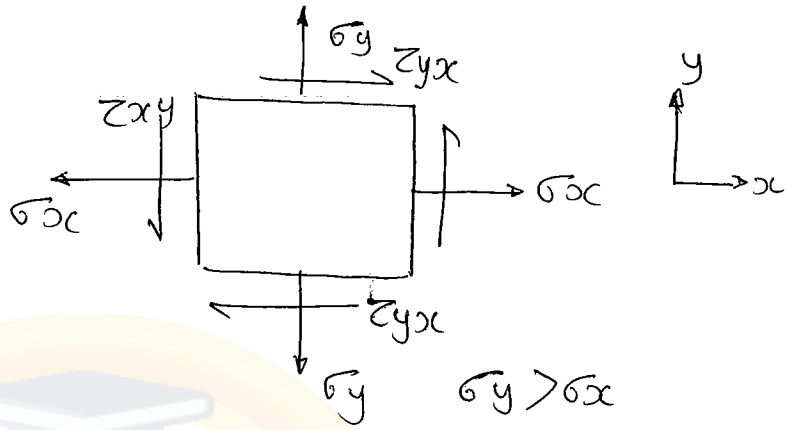

$\sigma_y > \sigma_x$

Principle ~~planes~~ stress

$$\sigma_{1 \text{ or } 2} = \left(\frac{\sigma_x + \sigma_y}{2}\right) \pm \sqrt{\frac{(\sigma_x - \sigma_y)^2}{2} + \tau_{xy}^2}.$$

Principal planes

$$\tan 2\phi = \frac{2\tau_{xy}}{\sigma_x - \sigma_y}.$$

→

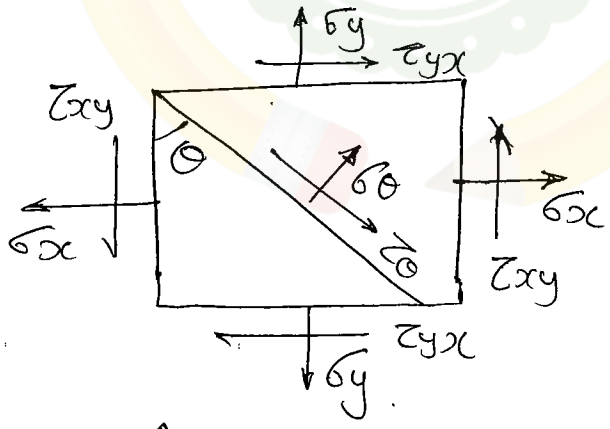

$\sigma_y > \sigma_x$.

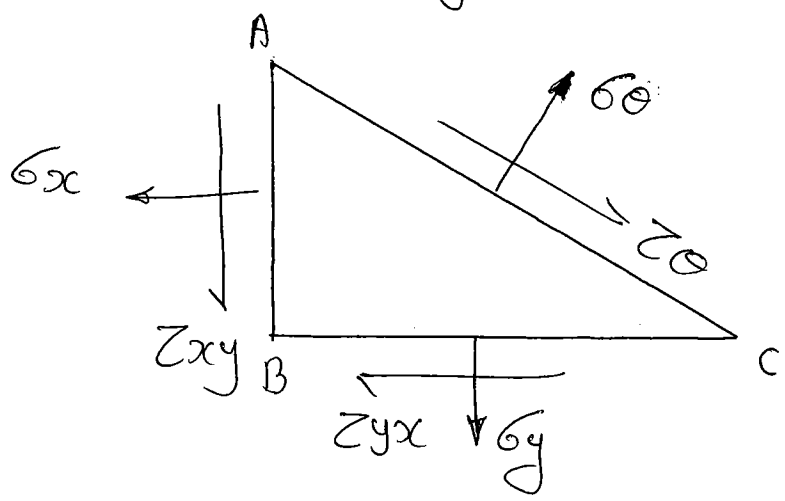

NewtonDesk.com

$$\sigma_\theta = \left(\frac{\sigma_x+\sigma_y}{2}\right) + \left(\frac{\sigma_x-\sigma_y}{2}\right)\cos 2\theta + \tau_{xy}\sin 2\theta$$

$$\tau_\theta = \left(\frac{\sigma_x-\sigma_y}{2}\right)\sin 2\theta - \tau_{xy}\cos 2\theta.$$

downward shear stress ~~moti~~ direction

Mohr's Circle.

$$\sigma = \begin{bmatrix} \sigma_x & \tau_{xy} \\ \sigma_{yx} & \sigma_y \end{bmatrix}$$

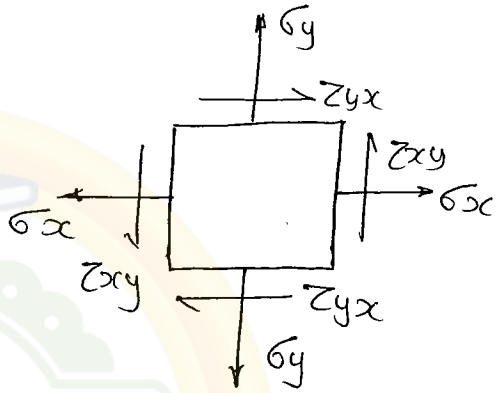

Assume
$\sigma_x > \sigma_y$.

$OA = \sigma_x$
$OB = \sigma_y$.

$AD = -\tau_{xy}$
$BE = +\tau_{yx}$.

Sign convention

→ Normal stress – abscissa
Tensile - - - +ve
Compressive - - -ve

→ Shear stress – ordinate
Clockwise +ve
C.C.W -ve

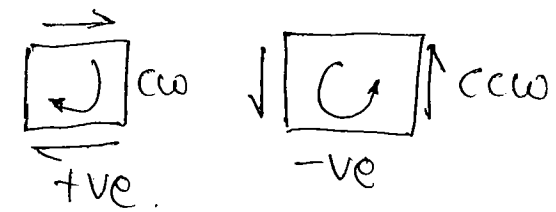

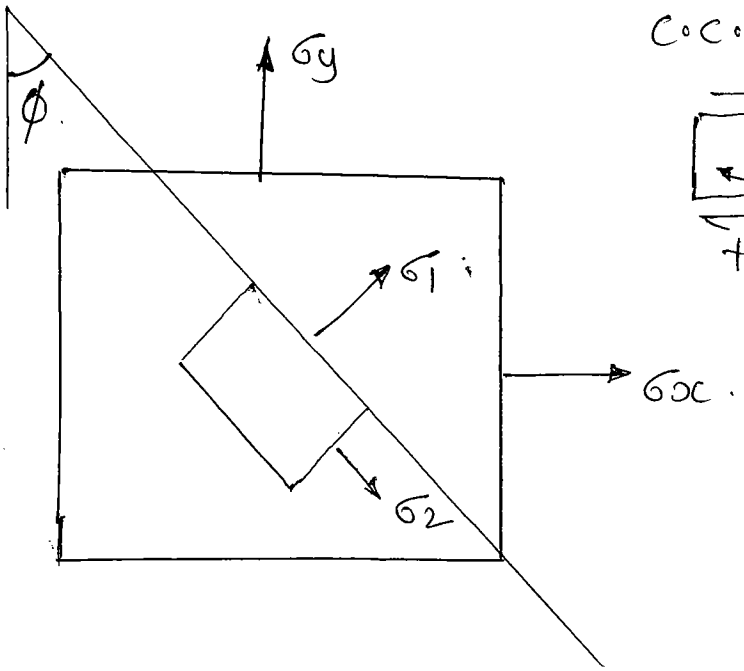

NewtonDesk.com

2ϕ - ~~hat~~ twise the actual value.

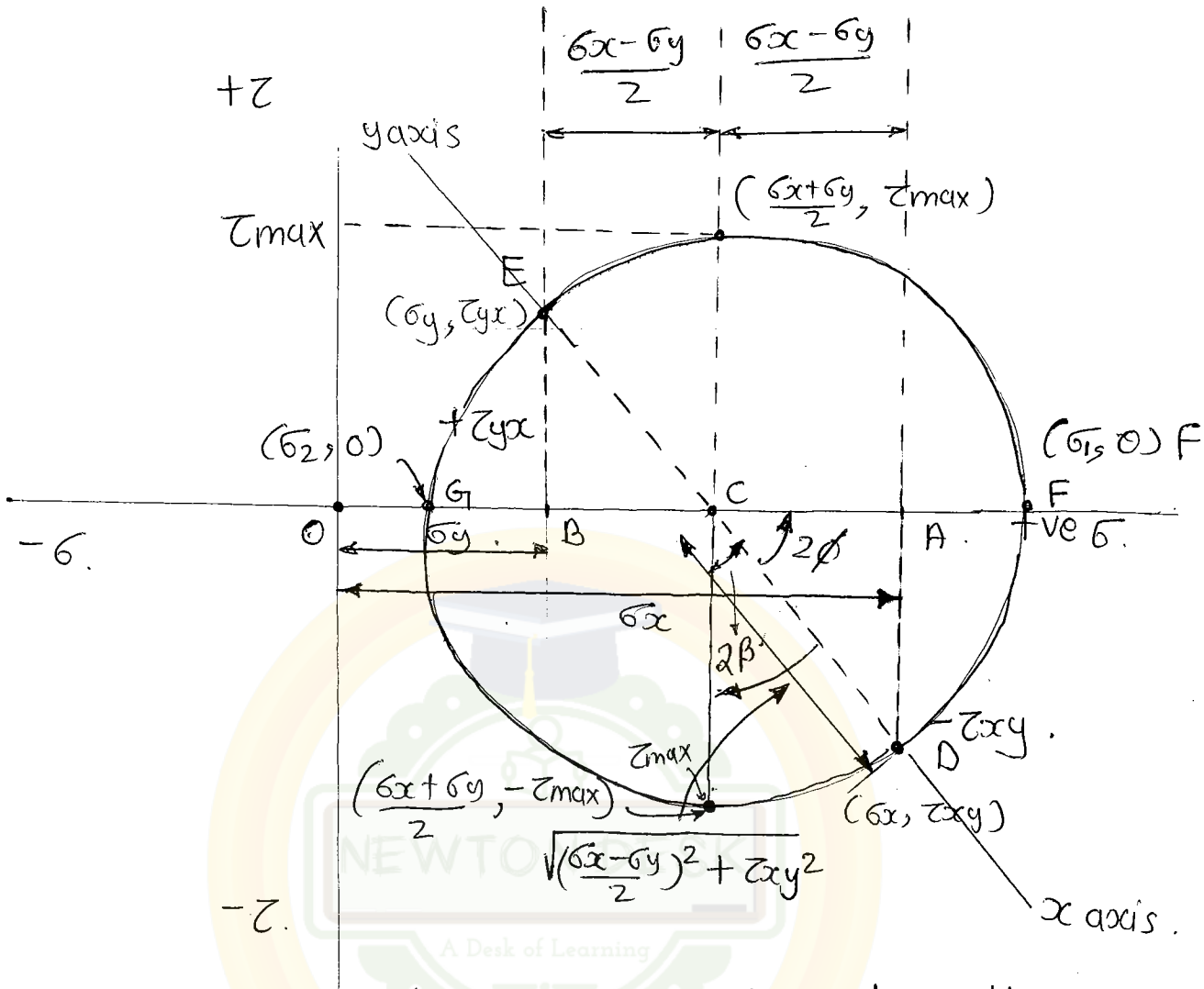

$\sigma_1 = OF$ – Maximum stress with zero shear stress. Hence Max ~~shear~~ principle stress.

$\sigma_2 = OG$ – Min stress with zero shear stress. Hence Min principle stress.

$$AC = BC = \frac{AB}{2} = \frac{\sigma x-\sigma y}{2}.$$

$$AB = \sigma x - \sigma y$$

$$OC = \sigma y + \frac{\sigma x-\sigma y}{2} = \frac{\sigma x+\sigma y}{2}. \quad (OB+OC)$$

$$OF = \sigma_1 = OC + CF. \quad (CF = CD = R)$$
$$= OC + CD.$$

$$\sigma_1 = \frac{\sigma x+\sigma y}{2} + \sqrt{\left(\frac{\sigma x-\sigma y}{2}\right)^2 + \tau xy^2}$$

$$\sigma_1 = \sigma x + \sigma y - R.$$

NewtonDesk.com

$$\tau_{max} = \text{Radius of mohr's circle} = R.$$

$$= \sqrt{\left(\frac{\sigma_x - \sigma_y}{2}\right)^2 + \tau_{xy}^2}$$

$$\sigma_1 = \frac{\sigma_x + \sigma_y}{2} + \tau_{max}.$$

$$\sigma_2 = \frac{\sigma_x + \sigma_y}{2} - \tau_{max}.$$

ORIENTATION OF PRINCIPAL PLANES.

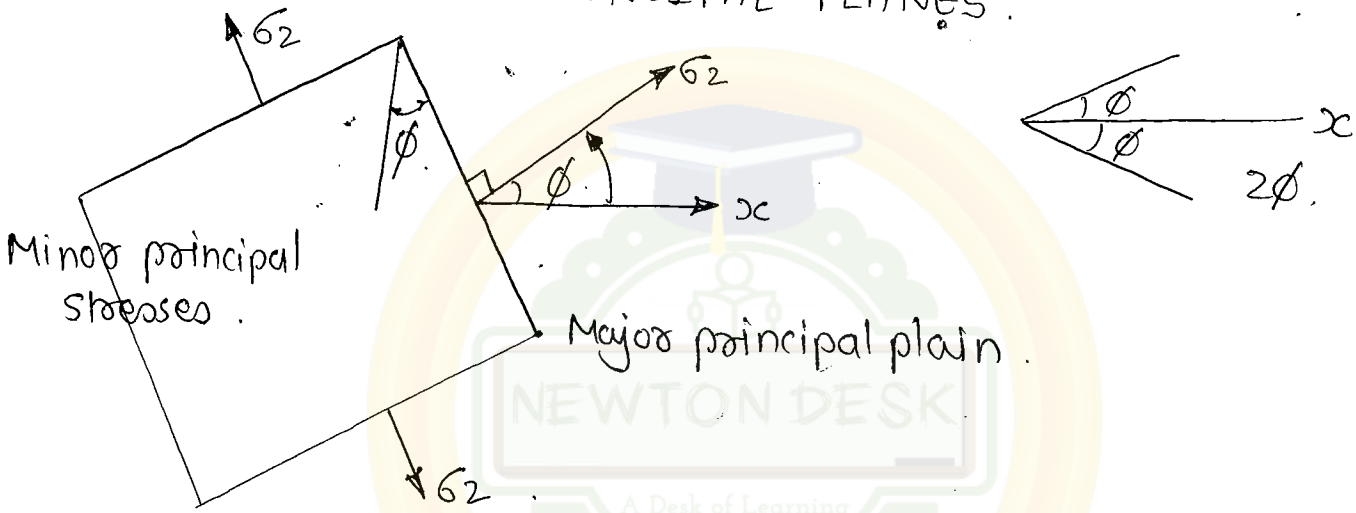

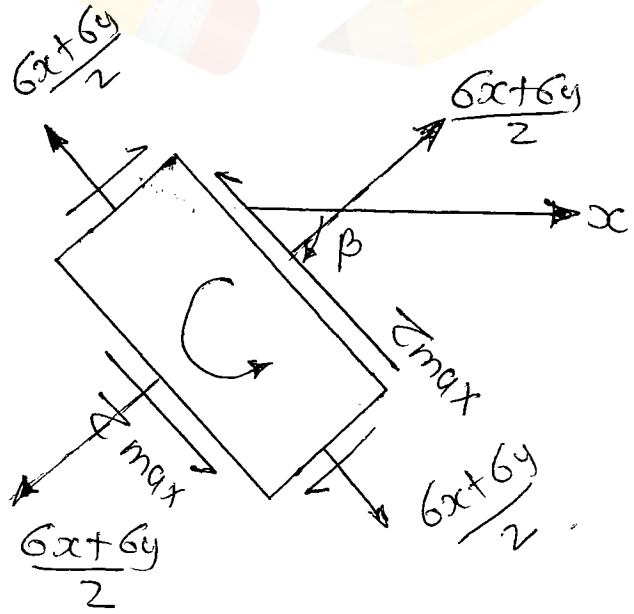

NewtonDesk.com

Design for Static Strength.

Q1] The strength of stress at a point is given, in Mpa is

$$\sigma = \begin{bmatrix} 40 & 0 \\ 0 & -30 \end{bmatrix}$$ The maximum shear stress.

a] 20 MPa b] 30 MPa c] 35 d] 40 MPa.

$\sigma_1 = 40 \quad \sigma_2 = -30. \quad \sigma_3 = 0$

$$\tau_{max} = \max of \left\{ \begin{matrix} \left|\frac{\sigma_1 - \sigma_2}{2}\right| \\ \left|\frac{\sigma_2 - \sigma_3}{2}\right| \\ \left|\frac{\sigma_3 - \sigma_3}{2}\right| \end{matrix} \right\} = \left\{ \begin{matrix} \frac{40-(-30)}{2} \\ \frac{+40}{2} \\ \frac{-30}{2} \end{matrix} \right\} \begin{matrix} \frac{70}{2} = 35 \\ \frac{40}{2} = 20 \\ \frac{-30}{2} = 15 \end{matrix}$$

$$\sigma = \begin{bmatrix} 40 & 0 \\ 0 & 30 \end{bmatrix} \qquad \tau_{max} = \frac{40-30}{2} = 10/2 = 5$$

$$\frac{40}{2} = 20 \checkmark.$$

$$\frac{30}{2} = 15$$

2] The stress at a point in Mpa is. $\sigma = \begin{bmatrix} 50 & 10 \\ 10 & 30 \end{bmatrix}$

The principle stress.

$$\sigma = \begin{bmatrix} 50 & 10 \\ 10 & 30 \end{bmatrix} \qquad \sigma_1 = \frac{\sigma_x + \sigma_y}{2} + \sqrt{\left(\frac{\sigma_x - \sigma_y}{2}\right)^2 + \tau_{xy}^2}$$

$\sigma_1 = 50 \quad \sigma_2 = 30 \quad \sigma_3 = 0$ Principal stress.

$$\sigma_A = \frac{50+30}{2} + \sqrt{\left(\frac{50-30}{2}\right)^2 + 10^2} = 54.1421 \text{ MPa}.$$

$$\sigma_B = \frac{50+0}{2} + \sqrt{\left(\frac{50}{2}\right)^2 + 10^2} = 51.92 \text{ MPa}.$$

$$\sigma_C = \frac{30}{2} + \sqrt{\left(\frac{30}{2}\right)^2 + 10^2} = 33.02 \text{ MPa}$$

Shear stress

$$\sigma_A = \sqrt{\left(\frac{\sigma_x - \sigma_y}{2}\right)^2 + \tau^2} = 14.14$$

$$\sigma_B = 26.92 \text{ MPa}. \checkmark$$

NewtonDesk.com

③ The stress tensor at a a point is given by by (in MPa)

$$T = \begin{bmatrix} 10 & 5 & 0 \\ 5 & 20 & 0 \\ 0 & 0 & -20 \end{bmatrix}$$ The principal stresses are

$$T = \begin{bmatrix} 10 & 5 & 0 \\ 5 & 20 & 0 \\ 0 & 0 & -20 \end{bmatrix} \quad \sigma_3 = -20\,MPa.$$

$$\sigma_1 = \frac{10+20}{2} + \sqrt{\left(\frac{10+20}{2}\right)^2 + 5^2} = 22.071$$

$$\sigma_2 = \frac{10+20}{2} - \sqrt{\left(\frac{10+20}{2}\right)^2 + 5^2} = 7.93\,MPa.$$

④ Consider a two dimention state of stress given form element as shown in fig.

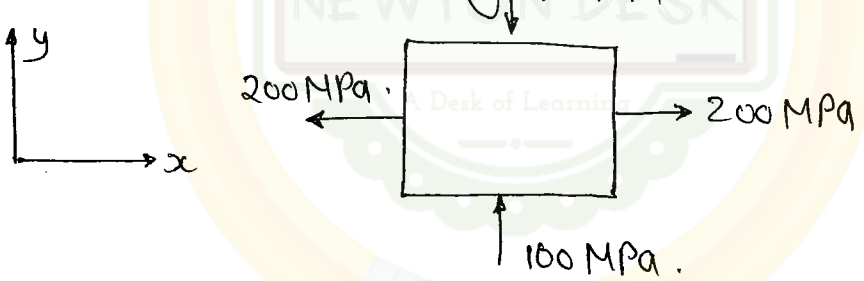

What are the co-ordinate centre of mohr's circle.

a) (0,0) b) (100,200) c) (200,100) d) (50,0) ✓

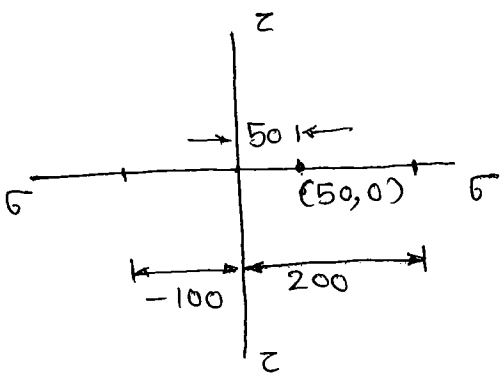

NewtonDesk.com

(5) In a strained material one of the principal stresses is twise the other. The maximum shear stresses in the same case is τ_{max}, then what is the max value of principal stress

a] τ_{max} b] $2\tau_{max}$ c] $4\tau_{max}$ d] $8\tau_{max}$.

$\sigma_1 = 2\sigma_2$

$\tau_{max} = \frac{2\sigma_1 - \sigma_2}{2} = \frac{2\sigma_2 - \sigma_2}{2}$

$\sigma_2 = 2\tau_{max}$

$\sigma_1 = 4\tau_{max}$

(6).

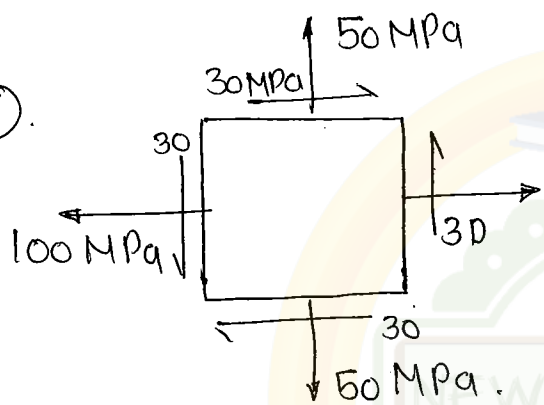

Draw the mohr's circle.

1cm = 10 MPa

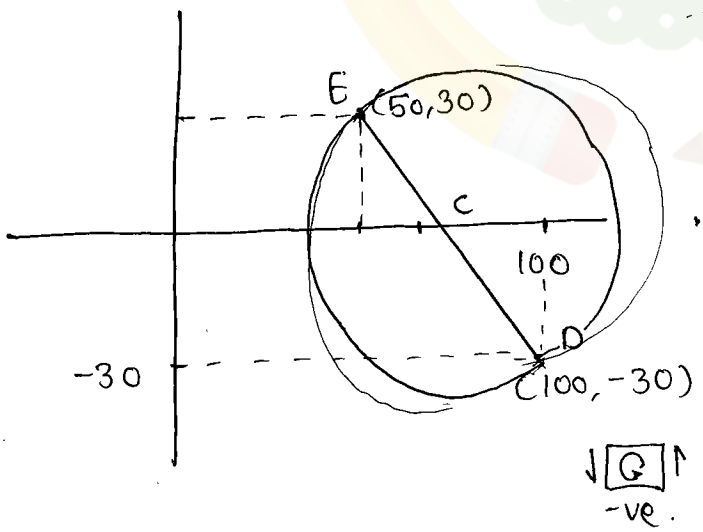

$\tau_{max} = \max \text{ of } \left(\frac{\sigma_1 - \sigma_2}{2}, \frac{\sigma_1}{2}, \frac{\sigma_2}{2} \right)$

$= \frac{2\sigma_2 - \sigma_2}{2} = \frac{\sigma_2}{2}$

$= \frac{2\sigma_2}{2} = \sigma_2 = \tau_{max}.$

$= \frac{\sigma_2}{2}$

$\sigma_1 = 2\tau_{max}$

NewtonDesk.com

(7). Draw a mohr's circle under uniaxial state of stress.

Mohr's circle for simple tension

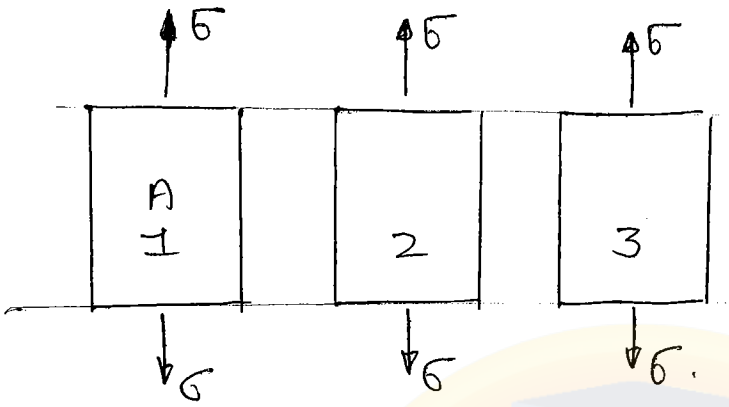

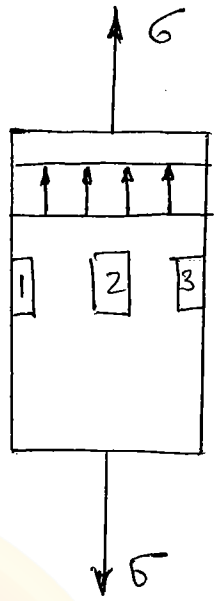

$\sigma = \frac{F}{A}$.

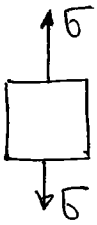

$\sigma_x = 0$
$\sigma_y = \sigma$
$\tau_{xy} = 0$.

$OA = 0$
$OB = \sigma_y$
$AD = -\tau_{xy} = 0$
$BE = \tau_{xy} = 0$

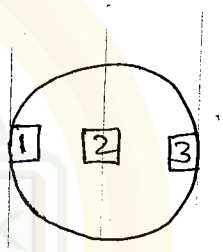

$\tau_{max} = \frac{\sigma_y}{2} = \frac{\sigma}{2}$.

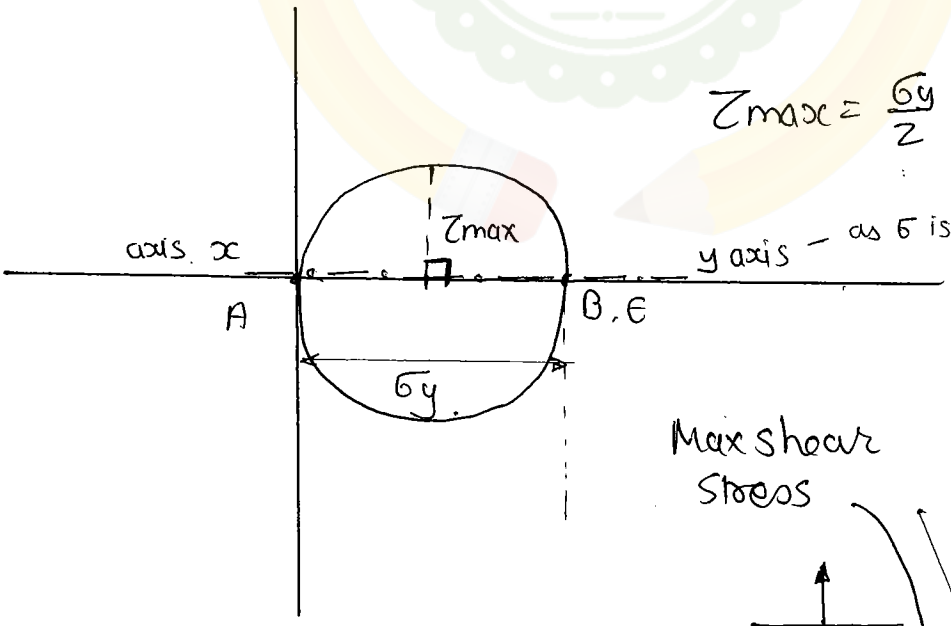

as σ is acting in y axis

Max shear stress

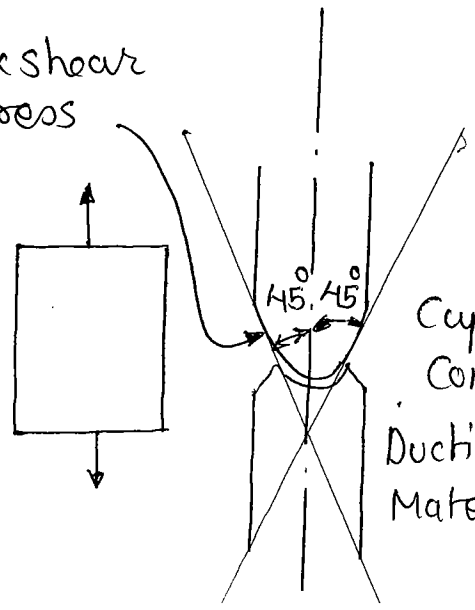

Cup & Cone

Ductile Material

NewtonDesk.com

Mohr's Circle For Torsion stresses.

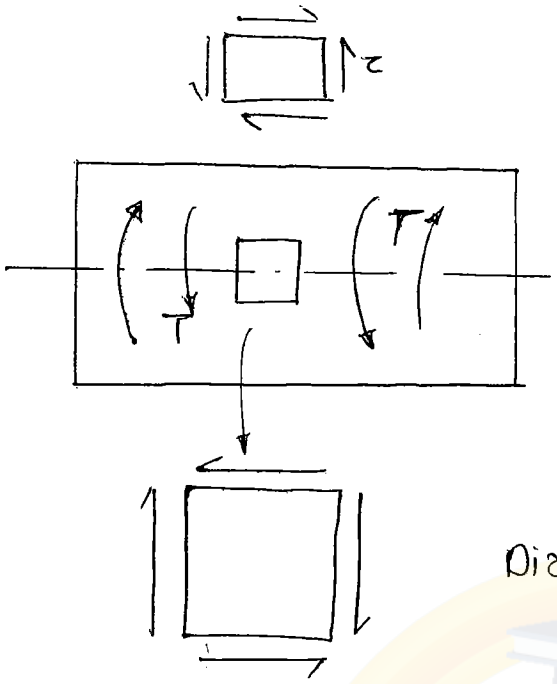

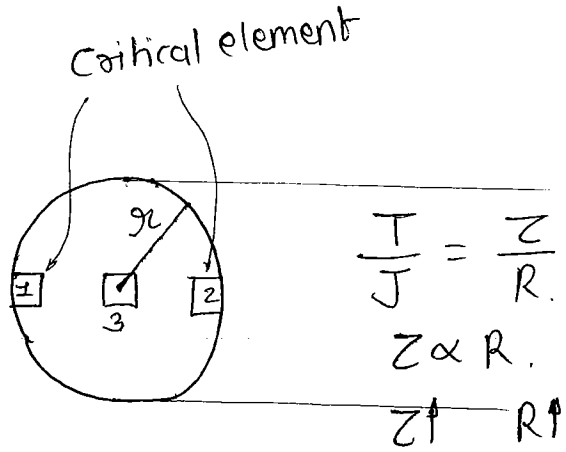

$$\frac{T}{J} = \frac{\tau}{R}$$

$\tau \propto R$.

$\tau \uparrow \quad R \uparrow$

$R = 0 \quad \tau = 0$.

Direction of shear stress is depends upon the direction of torque we applied.

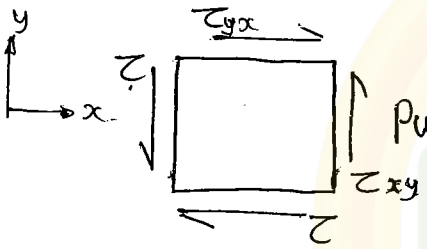

Pure stress

τ_{xy} -ve

τ_{yx} +ve

Brittle material – Separation of layer

Ductile " – Sliding

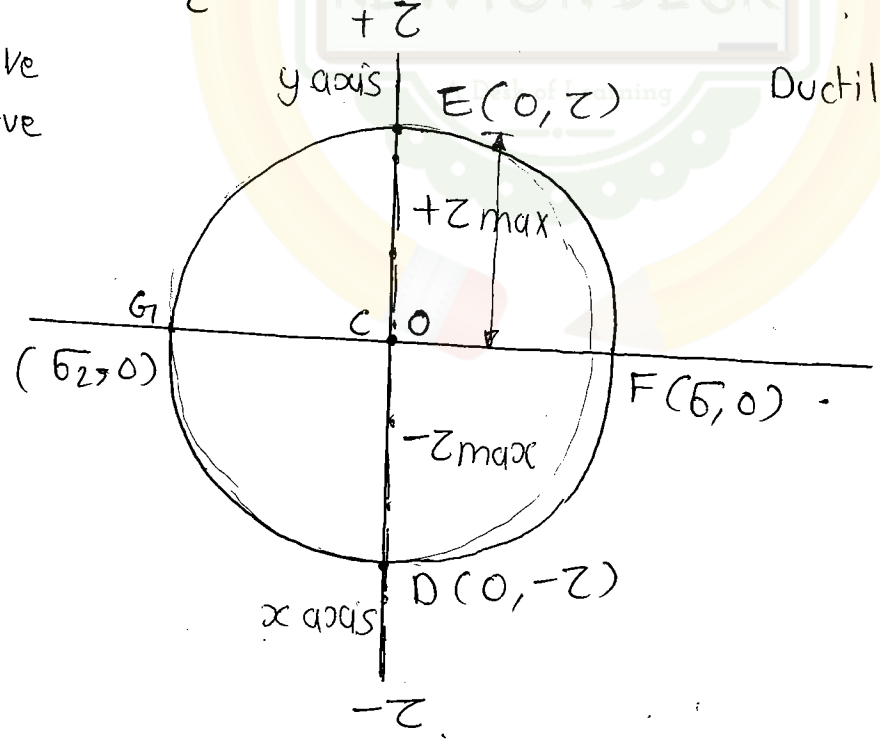

NewtonDesk.com

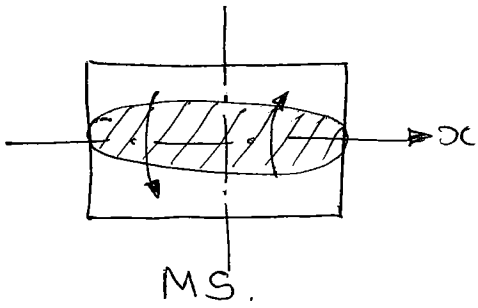

Shear failure under torsion

Resistance is less. Hence failure take place at a plane ⊥ to x axis.

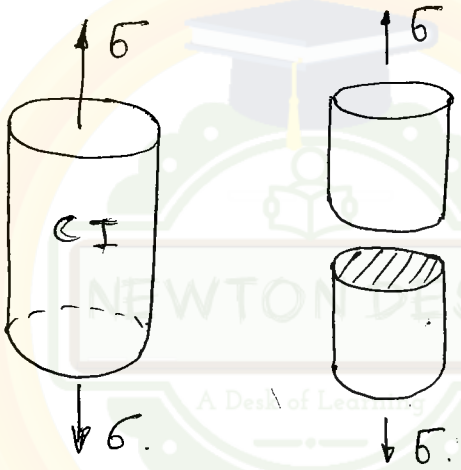

Under Normal stress
Brittle material

Fractured.
Separated.

Plane of max Normal stress at an angle of 45°

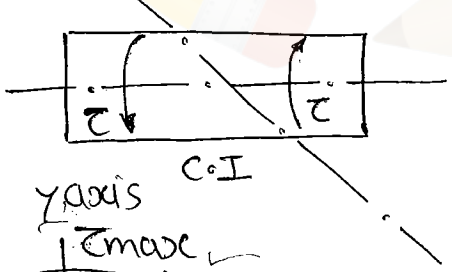

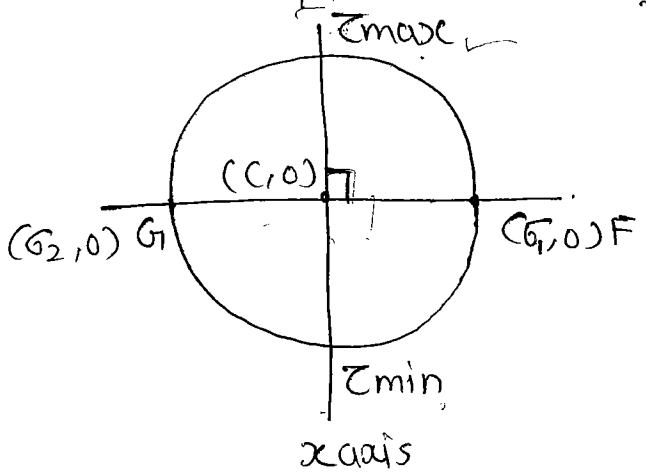

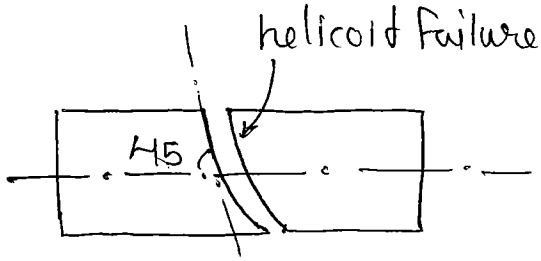

CI, Concrete, glass

NewtonDesk.com

$$\sigma = \begin{bmatrix} 0 & \tau \\ \tau & 0 \end{bmatrix} = \begin{bmatrix} +\tau & 0 \\ 0 & -\tau \end{bmatrix}$$

Normal Shear stress

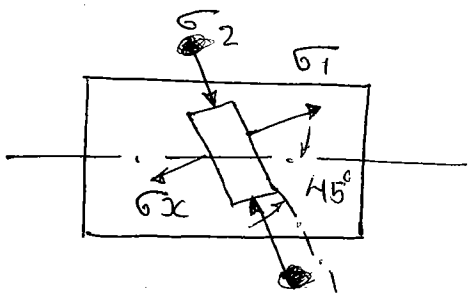

$$\sigma = \begin{bmatrix} \sigma_1 & 0 \\ 0 & -\sigma_2 \end{bmatrix} \qquad \sigma_1 = \sigma_2 = \sigma = \tau$$

$$= \begin{bmatrix} \sigma & 0 \\ 0 & -\sigma_2 \end{bmatrix} = \begin{bmatrix} \tau & 0 \\ 0 & -\tau \end{bmatrix}$$

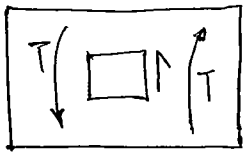

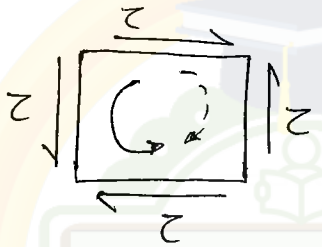

$$\sigma = \begin{bmatrix} \sigma_x & \tau_{xy} \\ \tau_{yx} & \sigma_y \end{bmatrix} = \begin{bmatrix} 0 & \tau \\ \tau & 0 \end{bmatrix}$$

NewtonDesk.com

Mohr's circle for Hydrostatic stress.

The stress is same in all direction. in compression or in tension.

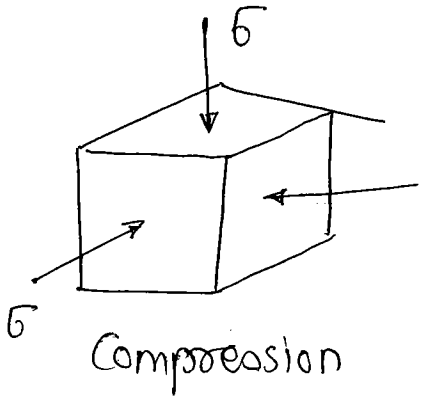

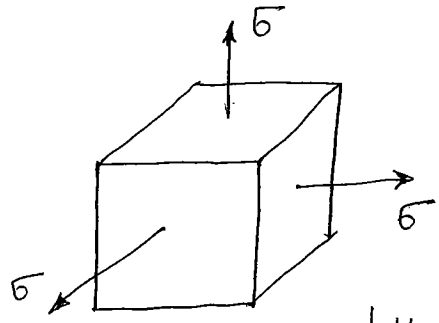

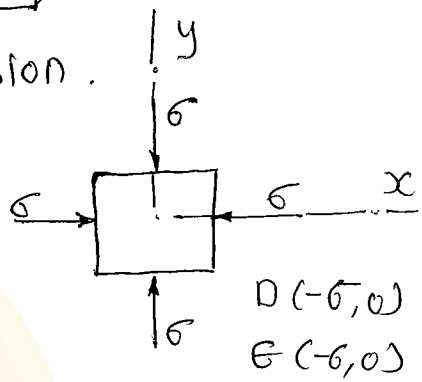

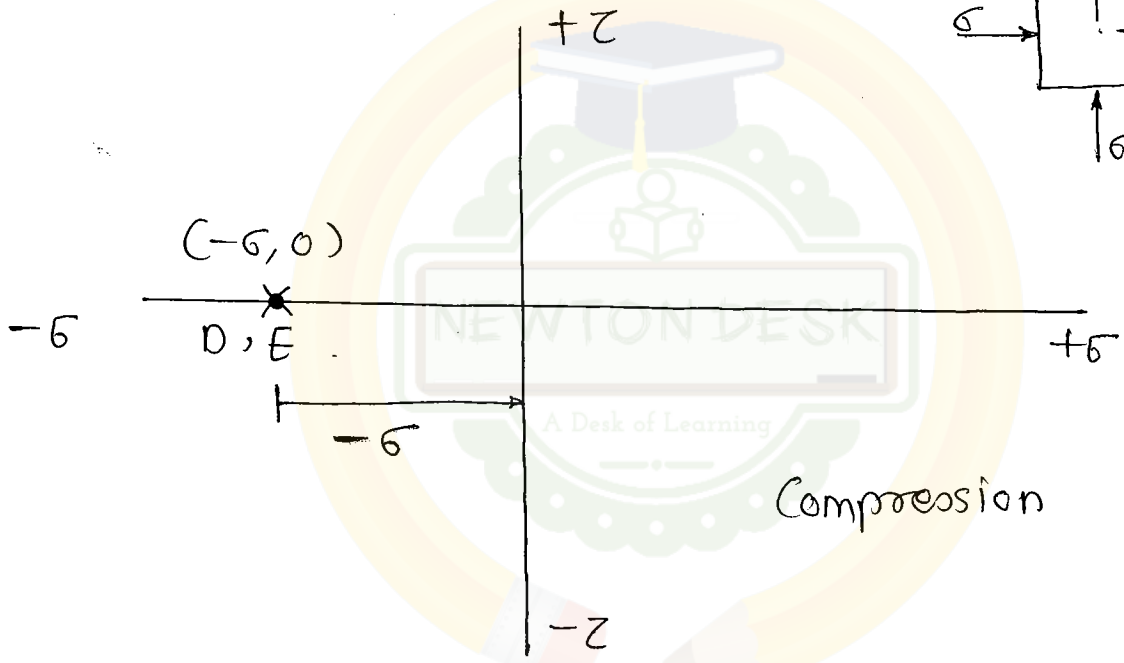

A point -ve site of absisa is called as hydrostatic stress. under compression

NewtonDesk.com

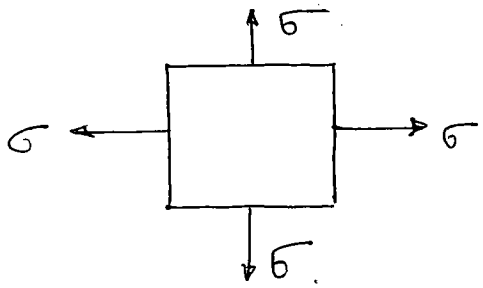

D (σ, 0) – x plane
E (σ, 0) – y plane

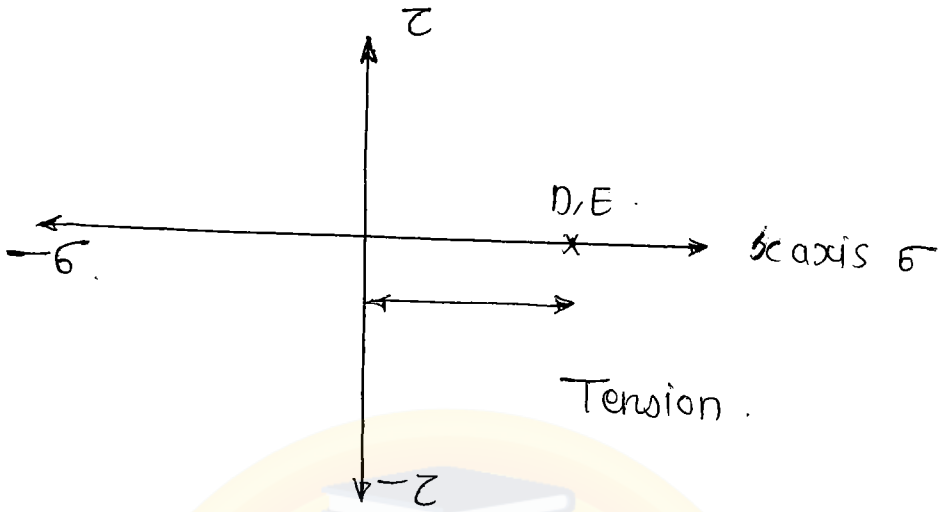

A point on the +ve side of the x axis is called as Hydrostatic stress under tension.

	Ductile Material	Brittle Material.
Falure mode	yielding (Slipping of plane under shear)	Separation or fracture.
Strengths	$S_{yt} = S_{yc}$ Strength at yield point under tension or comp. 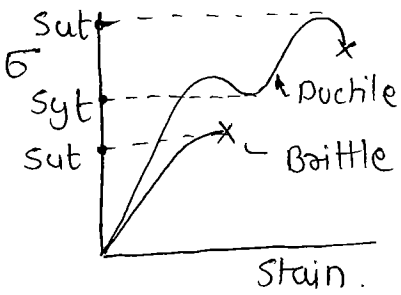 (Isotropic)	$\cancel{S_{yt}} = \cancel{S_{yc}}$ $S_{ut} \neq S_{uc}$ (Not isotropic)

NewtonDesk.com

NewtonDesk.com

NewtonDesk.com

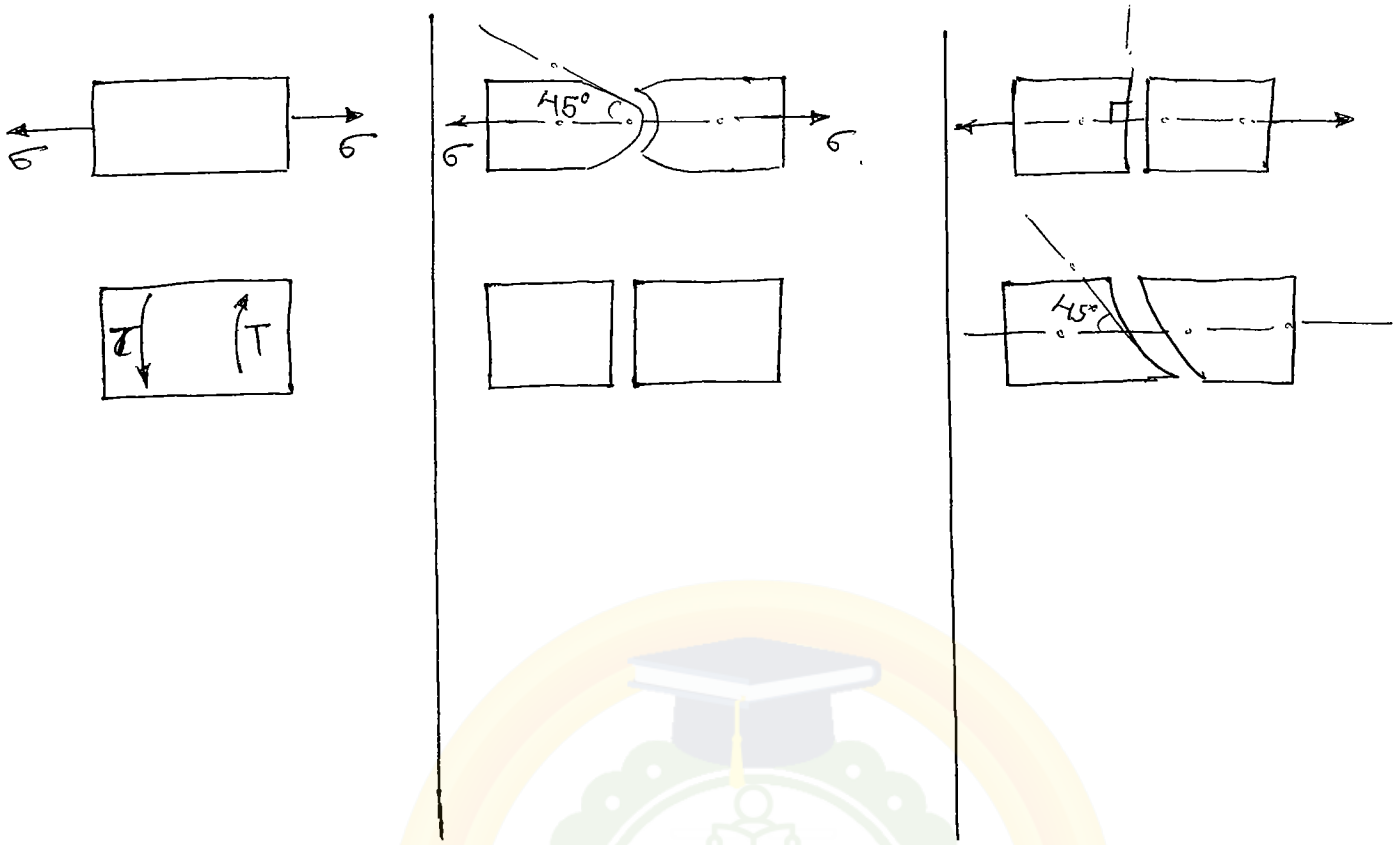

Theories of failure.

$$\sigma = \frac{F}{\pi/4\, d^2} = \text{strength.}$$

The component may get fail because of Sut, Suc, Syt, Sz and the max value out of this is consider.

NewtonDesk.com

Establishes a relationship between principal stresses. together with some elastic constants and the strength of the component determine by simple torsion.

E, G or C or N, K, μ - cont.

List 1	List 2	Theories of failure.				
			A	B	C	D
A] 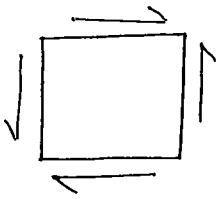	Combine bending & torsion.	a)	2	1	3	4
B] 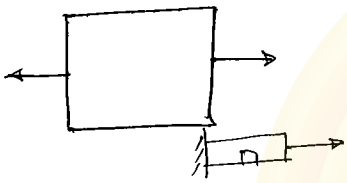	Torsion.	b)	3	4	2	1
C] 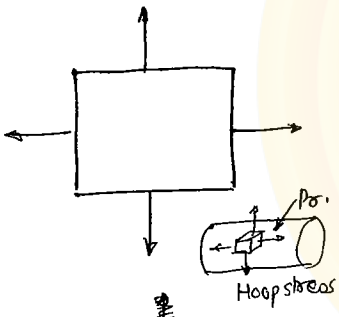	Thin cylindrical Shells under pressure	c) ✓	2	4	3	1
d] 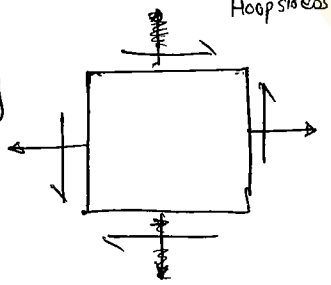	Tie bar subjected to tensile force	d)	3	1	2	4.

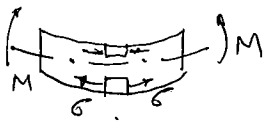

NewtonDesk.com

Q1] The maximum shear stress in a bar of C/S are A mm^2 and subjected to a tensile load of p newtons is

a] 0 b] P/A c] P/2A d] P/4A.

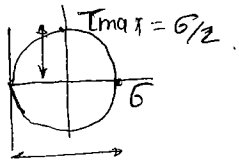

Q2. A steel saw blade 1mm thick is bent into an arc of circle of 500 mm radius. The width of blade is 15mm and E = 210 GPa.

1. Fluxtural stress induced is.

a] 110 b] 210 c] 250 d] 350.

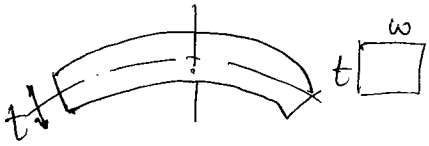

$$\frac{M}{I} = \frac{\sigma_b}{y} = \frac{E}{R}.$$

$$\frac{\sigma_b}{y} = \frac{E}{R}.$$

$$\sigma_b = E \times \frac{y}{R} = 210\times10^3 \times \frac{t}{2} \times \frac{1}{500}$$

$$\sigma_b = 210t \quad t = 1.$$

$$\boxed{\sigma_b = 210}$$

Theory of Failures.

① Rankine's theory (or) Maximum normal stress theory.

If $\sigma_1 > \sigma_2 > \sigma_3$.

Then σ_1 = Max normal stress

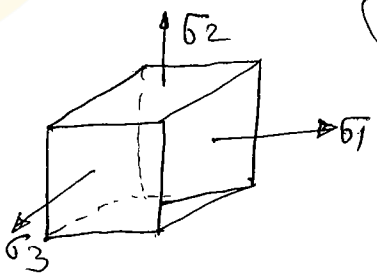

If $\sigma_1 > S_{yt}$ - ductile.
$\sigma_2 > S_{ut}$ - brittle. } Component of Failure.

$\sigma_1 \leq S_{ut}$ - safe

$\sigma_1 \leq S_{ut}$ - safe.

Design Equation.

$$\sigma_1 = \frac{S_{yt}}{F.S} \quad - \text{Ductile}$$

F.S = factor of safety.

$$\sigma_2 = \frac{\sigma_{ut}}{F.S} \quad - \text{Brittle}.$$

NewtonDesk.com

Validities – Valid for brittle material and not valid for ductile material.

– Disregards the effect of other stresses.

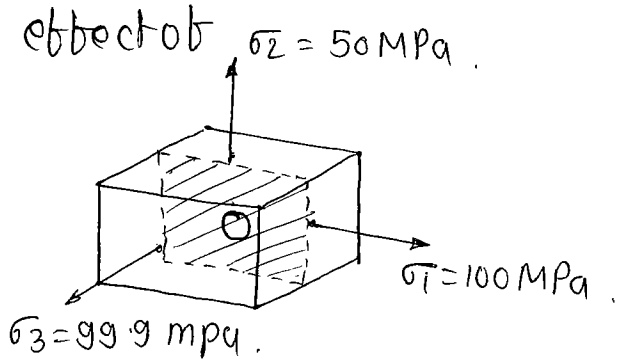

Graph.

For Ductile material

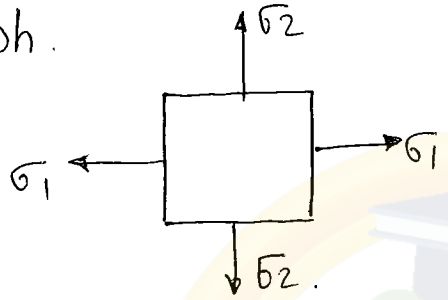

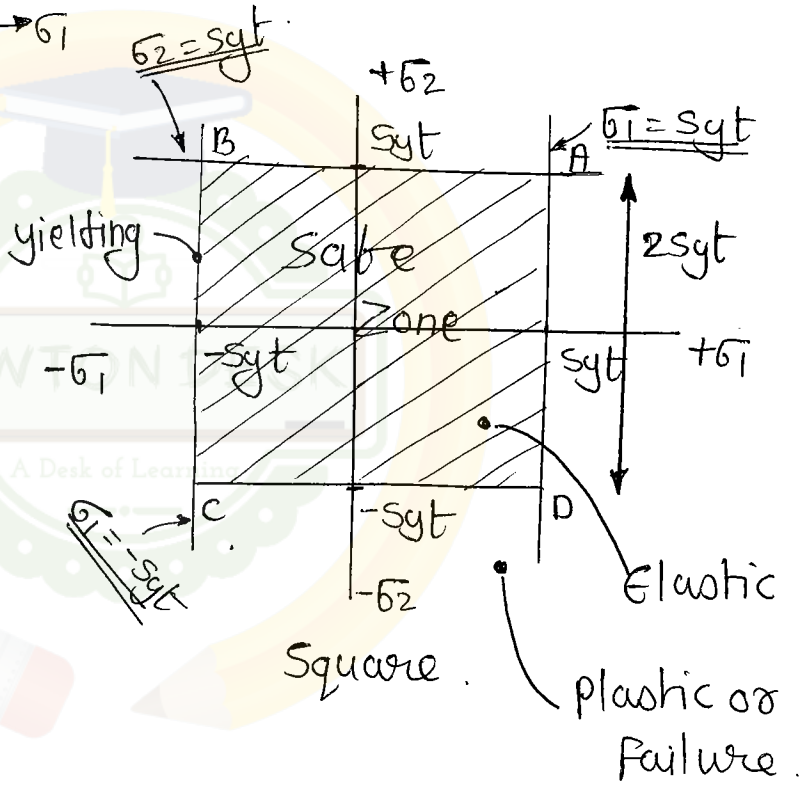

a] If $\sigma_1 > \sigma_2$

$\sigma_1 = \frac{S_{yt}}{F.S = 1}$ (Ductile).

$\sigma_1 = S_{yt}$

$x = a$.

b] If $\sigma_2 > \sigma_1$.

$\sigma_2 = S_{yt}$

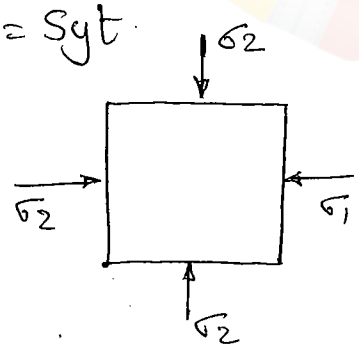

c] If $\sigma_1 > \sigma_2$

$\sigma_1 = S_{ye} = -S_{yt}$ (isotropic material)

d] If $\sigma_2 > \sigma_1$

$\sigma_2 = -S_{yt}$

NewtonDesk.com

Graph – Brittle Material.

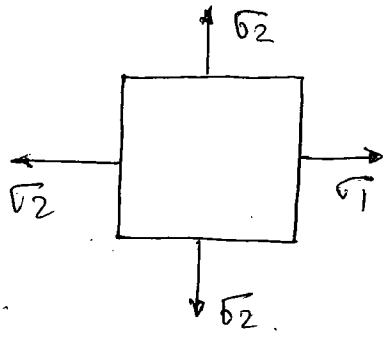

a] If $\sigma_1 > \sigma_2$

$\sigma_1 = S_{ut}$

b] If $\sigma_2 > \sigma_1$

$\sigma_2 = S_{ut}$

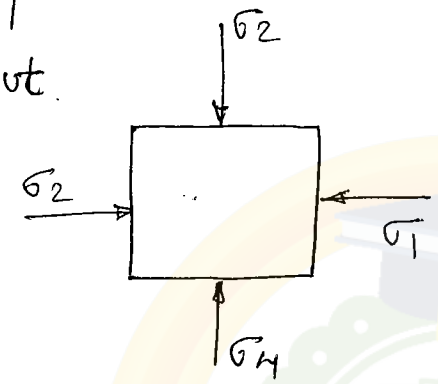

c] If $\sigma_1 > \sigma_2$

$\sigma_1 = S_{uc}$

d] If $\sigma_2 > \sigma_1$

$\sigma_2 = S_{uc}$

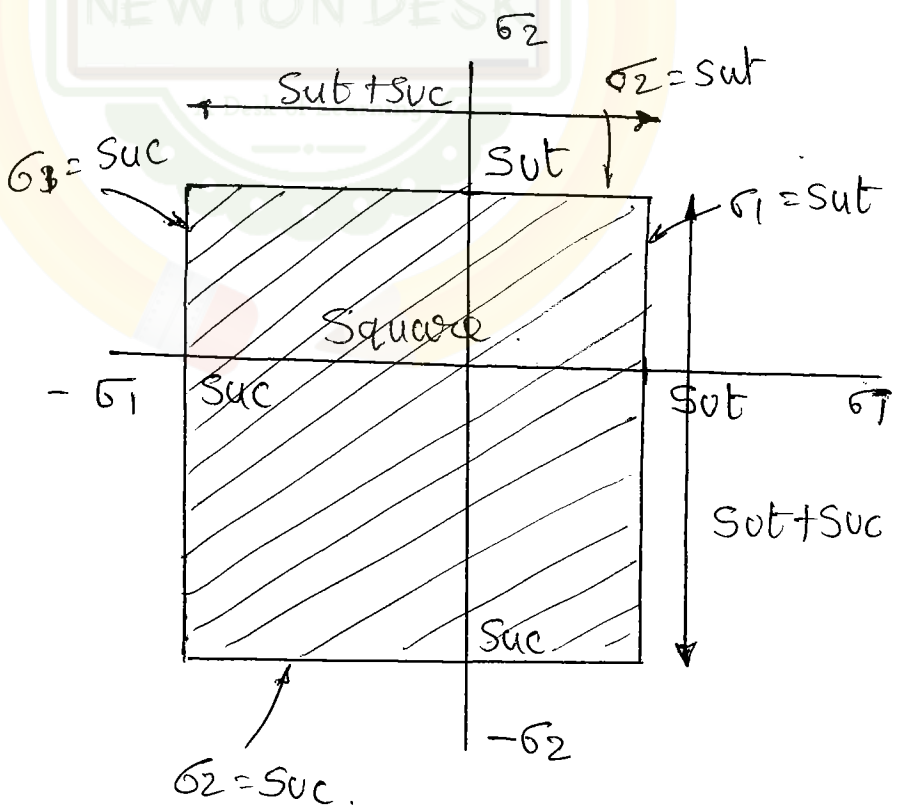

A component subjected to complex state of stress is said to be fail when the maximum normal stress at a point in the material exceeds the strength at yeld point under simple tension.

NewtonDesk.com

② Guest's theory or Tresca's theory or Maximum shear stress theory.

Maximum shear stress.

$\tau_{max} > S_{sy}$ – Failed.

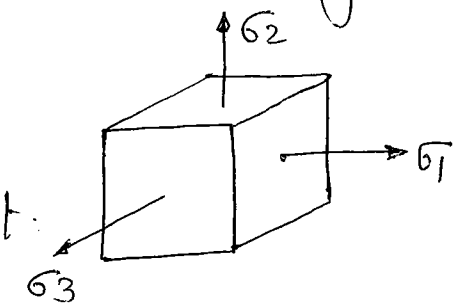

S_{sy} = Shear strength at yield point.

Design

$$\tau_{max} = \frac{S_{sy}}{F.S}$$

If Maximum shear stress

$\tau_{max} \leq S_{sy}$. – Safe.

$$\tau_{max} = \text{Max of} \left\{ \begin{matrix} \frac{\sigma_1 - \sigma_2}{2} \\ \frac{\sigma_1 - \sigma_3}{2} \\ \frac{\sigma_2 - \sigma_3}{2} \end{matrix} \right\} = \text{max of} \left\{ \begin{matrix} \left| \frac{\sigma_1 - \sigma_2}{2} \right| \\ \left| \frac{\sigma_1}{2} \right| \\ \left| \frac{\sigma_2}{2} \right| \end{matrix} \right\}$$

If $\sigma_1 > \sigma_2 > \sigma_3$ and all are like stresses

then,

$$\tau_{max} = \frac{\sigma_{max} - \sigma_{min}}{2}$$

$$\tau_{max} = \frac{\sigma_1 - \sigma_3}{2}$$

$$\frac{\sigma_1 - \sigma_3}{2} = \frac{S_{yt}}{2 \times F.S.}$$

$$\boxed{\sigma_1 - \sigma_3 = \frac{S_{yt}}{F.S}}$$

S_{sy} Fail S_{yt}

$$\tau_{max} = \frac{\sigma}{2}$$

$$S_{sy} = \frac{S_{yt}}{2}$$

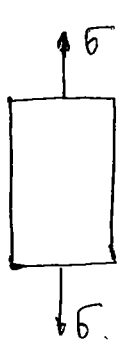

$$\tau_{max} = \frac{S_{sy}}{F.S}$$

$$= \frac{S_{sy}}{2 \times F_S}$$

* Validity

① Valid for only ductile material

② Not valid for brittle material

③ Not explained the failure phenomenon under hydrostatic stress

τ_{max} Fails

NewtonDesk.com

Graph. (Ductile material)

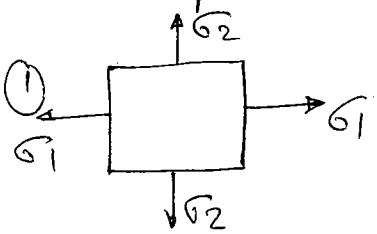

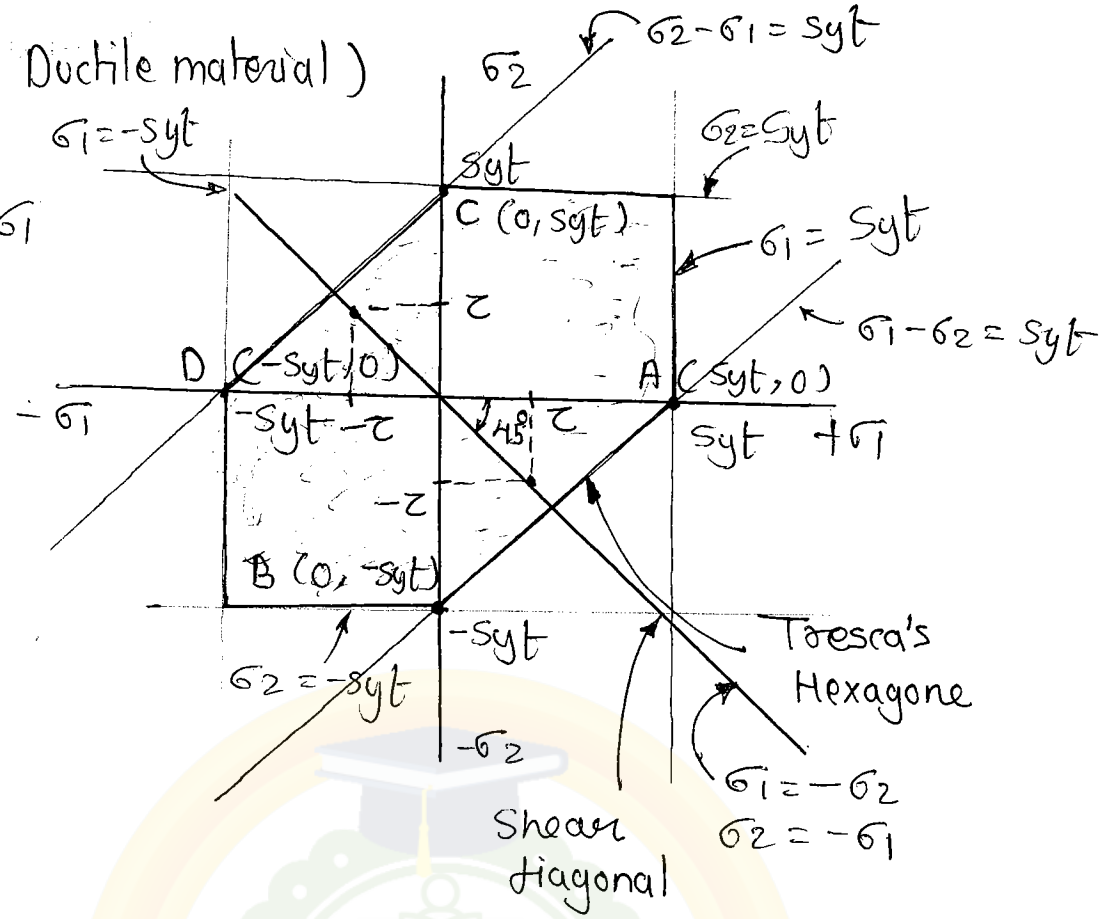

a] If $\sigma_1 > \sigma_2$

then, $\tau_{max} = \frac{\sigma_1}{2}$

$\tau_{max} = \frac{\sigma_1}{2} = \frac{S_{yt}}{2}$

$\sigma_1 = S_{yt}$

b] If $\sigma_2 > \sigma_1$

$\tau_{max} = \frac{\sigma_2}{2} = \frac{S_{yt}}{2}$

$\sigma_2 = S_{yt}$

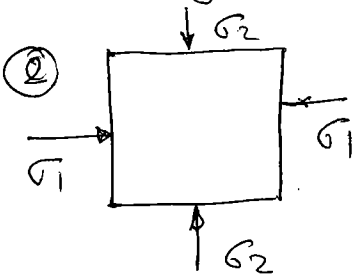

c] If $\sigma_1 > \sigma_2$

$\tau_{max} = \frac{\sigma_1}{2} = \frac{-S_{yt}}{2}$

$\sigma_1 = -S_{yt}$

d] If $\sigma_2 > \sigma_1$

$\tau_{max} = \frac{\sigma_2}{2} = \frac{-S_{yt}}{2}$

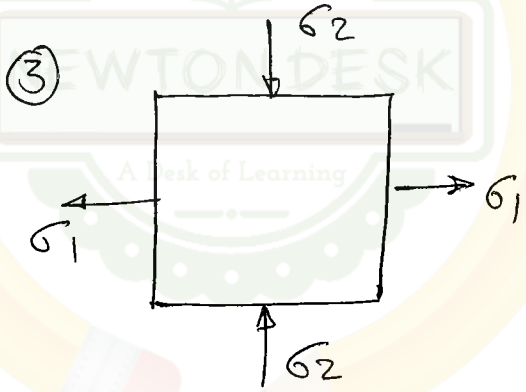

$$\tau_{max} = \max of \begin{cases} \frac{\sigma_1 - \sigma_2}{2} & 40 \\ \frac{\sigma_1 - \sigma_3}{2} & 50 \\ \frac{\sigma_2 - \sigma_3}{2} & 10 \end{cases}$$

20 100

$\tau_{max} = \frac{\sigma_1 - \sigma_2}{2} = \frac{S_{yt}}{2}$

$\sigma_1 - \sigma_2 = S_{yt}$

If $\sigma_2 = 0$, A $(S_{yt}, 0)$

$\sigma_1 = 0$, B $(0, -S_{yt})$

NewtonDesk.com

(A)

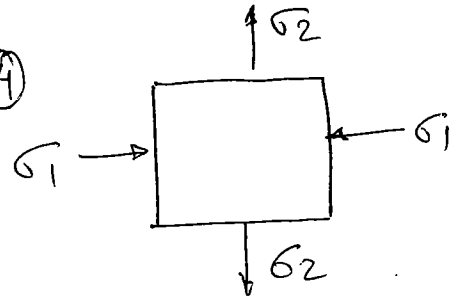

$$\tau_{max} = \frac{\sigma_2 - \sigma_1}{2} = \frac{S_{yt}}{2}.$$

$$\sigma_2 - \sigma_1 = S_{yt}$$

If,

$\sigma_1 = 0$. $\quad C(0, S_{yt})$

$\sigma_2 = 0$ $\quad D(0, -S_{yt}, 0)$.

* State of pure shear

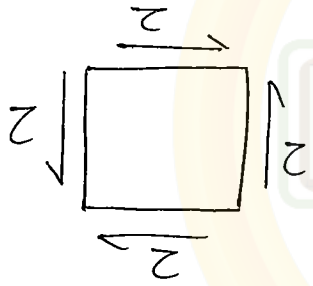

$$\sigma = \begin{bmatrix} 0 & \tau \\ \tau & 0 \end{bmatrix}$$

$$= \begin{array}{cc} \sigma_1 & \tau_{xy} \\ \end{array} \begin{bmatrix} \tau & 0 \\ 0 & -\tau \end{bmatrix} \begin{array}{c} \\ \sigma_2 \end{array}$$

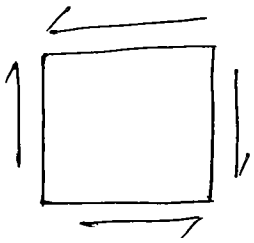

$$\sigma = \begin{bmatrix} 0 & \tau \\ -\tau & 0 \end{bmatrix}$$

$$= \begin{array}{c} \sigma_1 \\ \\ \sigma_2 \end{array} \begin{bmatrix} -\tau & 0 \\ 0 & \tau \end{bmatrix}$$

A component subjected to complex state of stress is said to be failed when the maximum shear stress at a point in the material exceeds the shear strength at yield point under simple tension.

NewtonDesk.com

Q A component is loaded as shown in fig the factor of safety according to

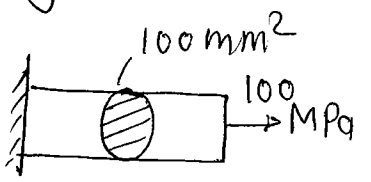

$S_{yt} = 300$ MPa.

1] Maximum normal stress theory.

a) 1 b) 2 c) 3 d) 4.

$$S_{yt} = \frac{\sigma}{F.S}$$

2] Maximum shear stress theory

a) 1 b) 2 c) 3 d) 4

$$\tau_{max} = \frac{\sigma_1}{2} = \frac{S_{yt}}{2 \times F_S}$$

Q A steel bolt is subjected to a direct tensile load of 8.4 KN and a shear load of 48 KN. The cross section area of bolt is 600 mm² and S_{yt} for bolt material is 200 MPa, the F.S according to maximum shear stress theory is

a] 1 b] 2 c] 3 d] 4.

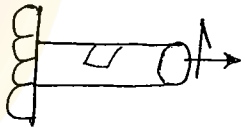

$$\sigma_1 = \frac{8.4 \times 10^3}{600} = 14 \text{ MPa}$$

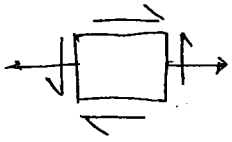

$$\tau = \sigma_s = \frac{18 \times 10^3}{600} = 30 \text{ MPa}.$$

$$\sigma_1 = \left(\frac{\sigma_x + \sigma_y}{2}\right) + \sqrt{\left(\frac{\sigma_x - \sigma_y}{2}\right)^2 + \tau^2}.$$

$$= 90 \text{ MPa}.$$

$$\sigma_2 = -10 \text{ MPa}.$$

$$\tau_{max} = \frac{\sigma_1 - \sigma_2}{2} = \frac{90 - (-10)}{2} = 50 \text{ MPa}.$$

$$\tau_{max} = \frac{S_{yt}}{2F_S}$$

$$50 = \frac{200}{2F_S} \quad \boxed{F_S = 2}$$

NewtonDesk.com

③ Saint Venant's theory (or) Maximum Principal strain theory.

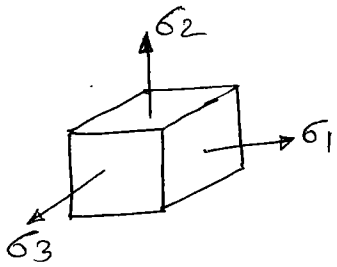

If $\sigma_1 > \sigma_2 > \sigma_3$

then $\varepsilon_1 > \varepsilon_2 > \varepsilon_3$.

$\varepsilon_1 \rightarrow$ Maximum principal strain

$\varepsilon_1 > \dfrac{S_{yt}}{E}$ – Failed.

$\mu = \dfrac{-\text{lateral strain}}{\text{longitudinal "}}$

$\mu = 0$ for cork

$\mu = 0.25$ to 0.33 for steel.

$= 0.47$ for rubber

Design Equation

$$\varepsilon_1 = \frac{S_{yt}}{E \times F.S} \quad -①$$

$$\varepsilon_1 = \frac{\sigma_1}{E} - \frac{\mu\sigma_2}{E} - \frac{\mu\sigma_3}{E} \quad -②$$

$$\frac{\sigma_1}{E} - \frac{\mu\sigma_2}{E} - \frac{\mu\sigma_3}{E} = \frac{S_{yt}}{E \times F.S}$$

$$\boxed{\sigma_1 - \mu\sigma_2 - \mu\sigma_3 = \frac{S_{yt}}{F.S}}$$

For 2D $\sigma_3 = 0$

$$\sigma_1 - \mu\sigma_2 = \frac{S_{yt}}{F.S}$$

Not valid for Brittle material or for Ductile material.

NewtonDesk.com

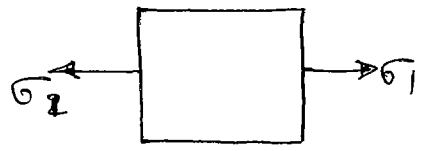

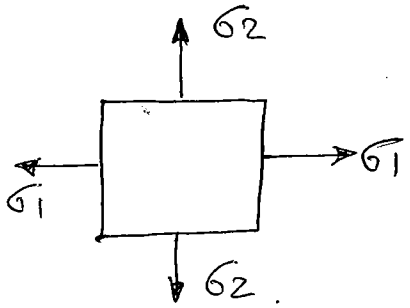

$$\varepsilon_{uni} = \frac{\sigma_1}{E}$$

$$\varepsilon_{biaxial} = \frac{\sigma_1}{E} - \frac{\mu\sigma_2}{E}.$$

$$\varepsilon_{uni} > \varepsilon_{bi}$$

Graph (Ductile)

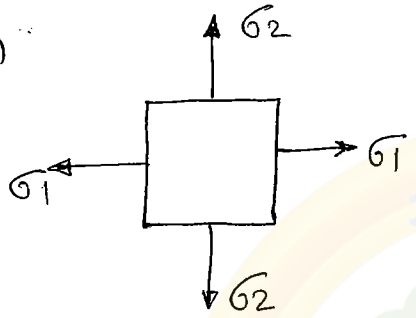

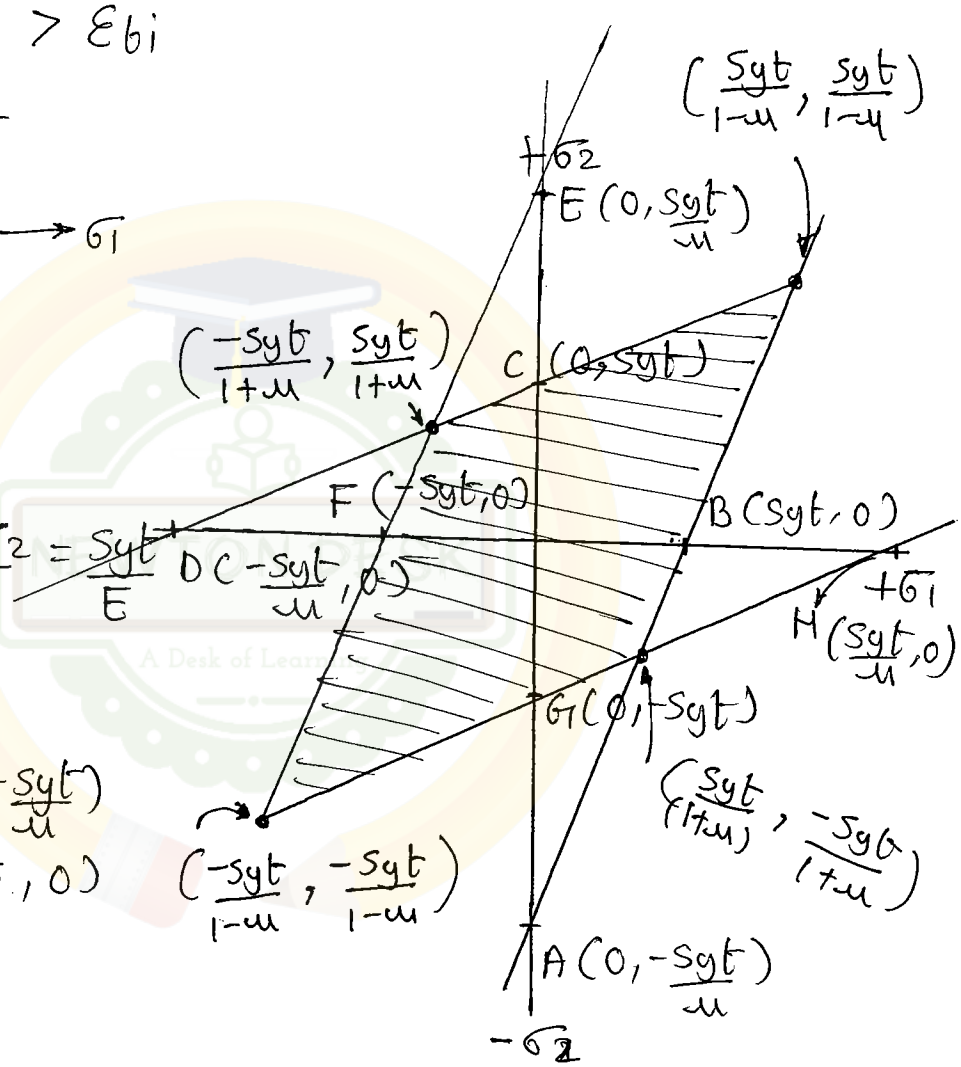

a] If $\sigma_1 > \sigma_2$

$$\varepsilon = \frac{\sigma_1 - \mu\sigma_2}{E} = \frac{S_{yt}}{E}$$

$$\sigma_1 - \mu\sigma_2 = S_{yt}$$

If $\sigma_1 = 0$ $\quad A\left(0, -\frac{S_{yt}}{\mu}\right)$

$\sigma_2 = 0$ $\quad B(S_{yt}, 0)$

b] If $\sigma_2 > \sigma_1$.

$$\sigma_2 - \mu\sigma_1 = S_{yt}.$$

If $\sigma_1 = 0$ $\quad C(0, S_{yt})$

$\sigma_2 = 0$ $\quad D\left(-\frac{S_{yt}}{\mu}, 0\right)$

NewtonDesk.com

(2)

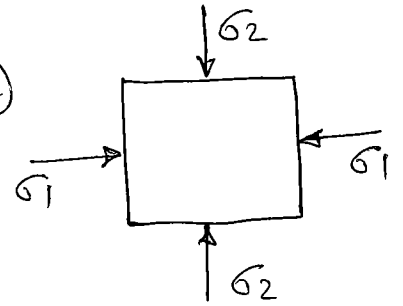

C] If $\sigma_1 > \sigma_2$.

$$\varepsilon_1 = \frac{\sigma_1}{E} - \frac{\mu\sigma_2}{E} = \frac{S_{yc}}{E}$$

$$\sigma_1 - \mu\sigma_2 = -S_{yt}$$

If $\sigma_1 = 0$ E$\left(0, \frac{+S_{yt}}{\mu}\right)$

$\sigma_2 = 0$ F$(-S_{yt}, 0)$

D] If $\sigma_2 > \sigma_1$

$$\sigma_2 - \mu\sigma_1 = -S_{yt}$$

If $\sigma_1 = 0$ G$(0, -S_{yt})$

$\sigma_2 = 0$ H$\left(\frac{S_{yt}}{\mu}, 0\right)$

A component subjected to complex state of stress is said to be failed when the maximum principal strain at a point in the material exceeds the strain at yield point under simple tension.

NewtonDesk.com

(A) Haigh's theory (or) Maximum strain energy theory.

Strain Energy

$$U = \frac{1}{2}\varepsilon \times \sigma$$
$$= \frac{1}{2}\sigma\varepsilon$$
$$= \frac{1}{2} \times \sigma \times \frac{\sigma}{E}$$
$$= \frac{\sigma^2}{2E}$$

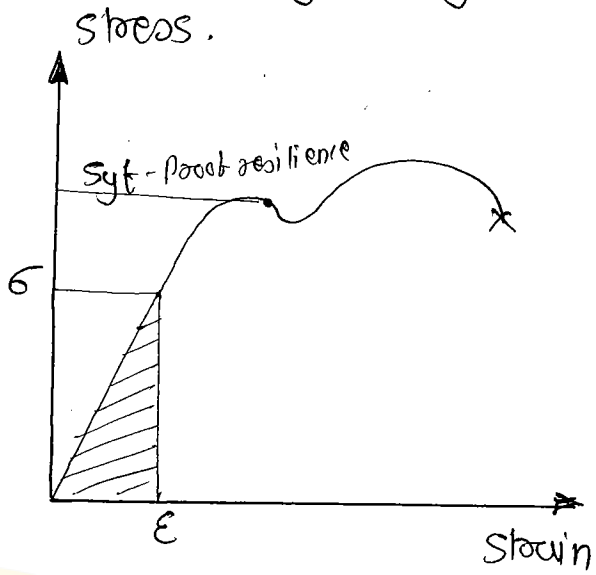

$$U \text{ at yield point} = \frac{Syt^2}{2E}$$

Strain energy density under complex loading.

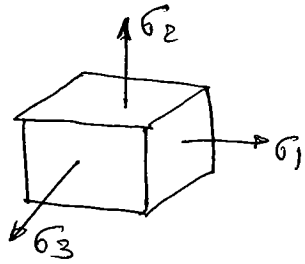

$$U_{complex} = \frac{1}{2}\sigma_1\varepsilon_1 + \frac{1}{2}\sigma_2\varepsilon_2 + \frac{1}{2}\sigma_3\varepsilon_3.$$

$$\varepsilon_1 = \frac{\sigma_1}{E} - \frac{\mu\sigma_2}{E} - \frac{\mu\sigma_3}{E}.$$

$$\varepsilon_2 = \frac{\sigma_2}{E} - \frac{\mu\sigma_2}{E} - \frac{\mu\sigma_1}{E}$$

$$\varepsilon_3 = \frac{\sigma_3}{E} - \frac{\mu\sigma_1}{E} - \frac{\mu\sigma_2}{E}.$$

$$U_{complex} = \frac{1}{2E}\left[\sigma_1^2 + \sigma_2^2 + \sigma_3^2 - 2\mu(\sigma_1\sigma_2 + \sigma_2\sigma_3 + \sigma_3\sigma_1)\right]$$

$U_{complex} \leq U$ simple tension — safe.

$$\frac{1}{2E}\left[\sigma_1^2 + \sigma_2^2 + \sigma_3^2 - 2\mu(\sigma_1\sigma_2 + \sigma_2\sigma_3 + \sigma_3\sigma_1)\right] = \left(\frac{Syt}{F.S}\right)^2 \times \frac{1}{2E}.$$

$$\frac{Syt}{F.S} = \sqrt{(\sigma_1^2 + \sigma_2^2 + \sigma_3^2) - 2\mu(\sigma_1\sigma_2 + \sigma_2\sigma_3 + \sigma_3\sigma_1)}$$

NewtonDesk.com

For 2D

$$\frac{S_{yt}}{F.S} = \sqrt{\sigma_1^2 + \sigma_2^2 - 2\mu\sigma_1\sigma_2}$$

$$x^2 + y^2 - 2bxy = a^2.$$

$$\sigma_1^2 + \sigma_2^2 - 2\mu_1\sigma_1\sigma_2 = S_{yt}^2.$$

If $\sigma_1 = 0$ $\quad \sigma_2 = \pm S_{yt}$

$\sigma_2 = 0$ $\quad \sigma_1 = \pm S_{yt}$

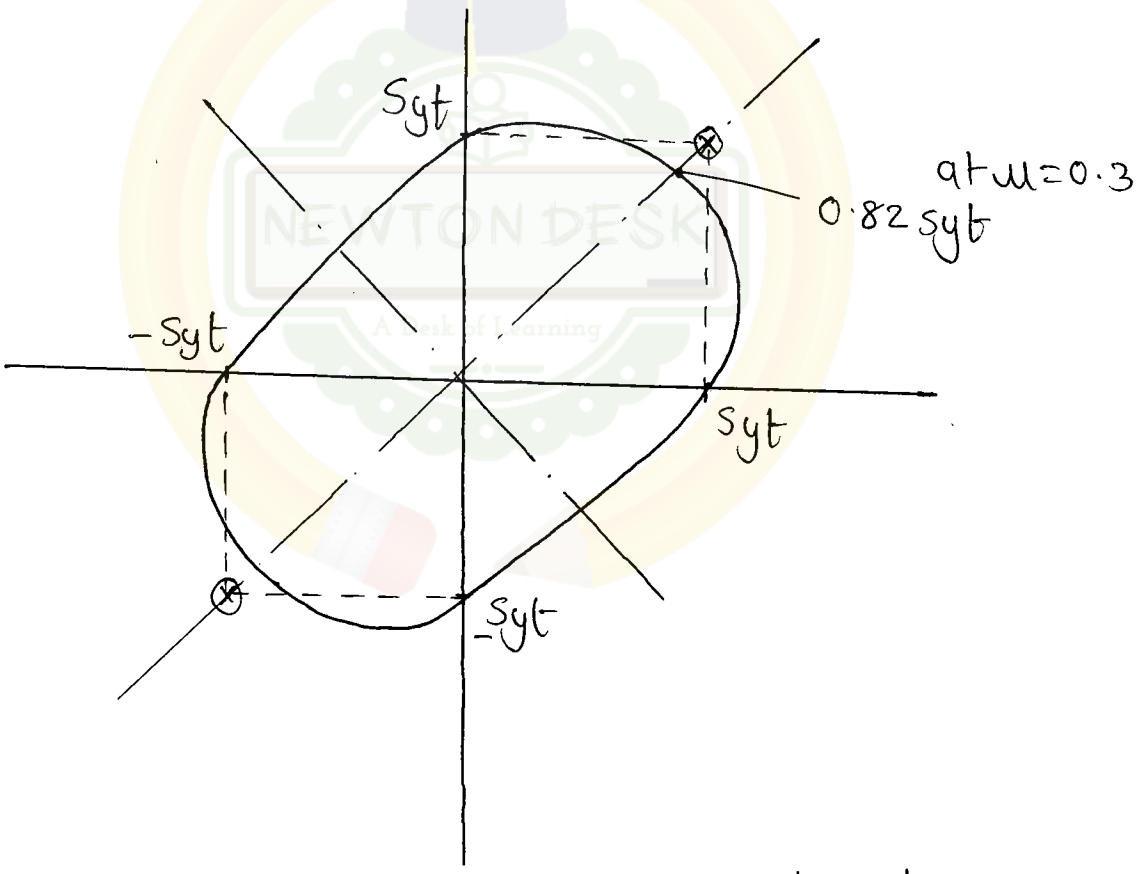

Validity -- Valid for Ductile material.

NewtonDesk.com

Q If the principal stresses at point are $\sigma_1 = +2f$, $\sigma_2 = +f$, $\sigma_3 = -\frac{1}{2}f$, and $S_{yt} = 200\ N/mm^2$, $\mu = 0.3$. The value of 'f' according to Haish's theorem

a] $100\ N/mm^2$ b] $75\ N/mm^2$ c] $90\ N/mm^2$ ✓ d] $150\ N/mm^2$

$$\left[\sigma_1^2 + \sigma_2^2 + \sigma_3^2 + 2\mu(\sigma_1\sigma_2 + \sigma_2\sigma_3 + \sigma_3\sigma_1)\right]^{1/2} = \frac{S_{yt}}{f.S}$$

5] Von Mises and Henky's theory (or) Shear strain Energy theory (or) Distortion Energy theory.

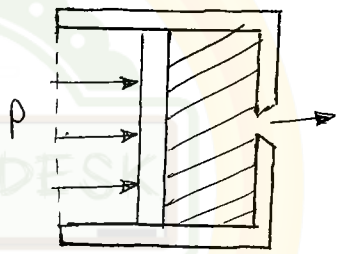

Total strain Energy (U_t)

$$U_t = \frac{1}{2E}\left[\sigma_1^2 + \sigma_2^2 + \sigma_3^2 - 2\mu(\sigma_1\sigma_2 + \sigma_2\sigma_3 + \sigma_3\sigma_1)\right]$$

$U_t = U_v + U_d$

= Volume change + Change of shape.

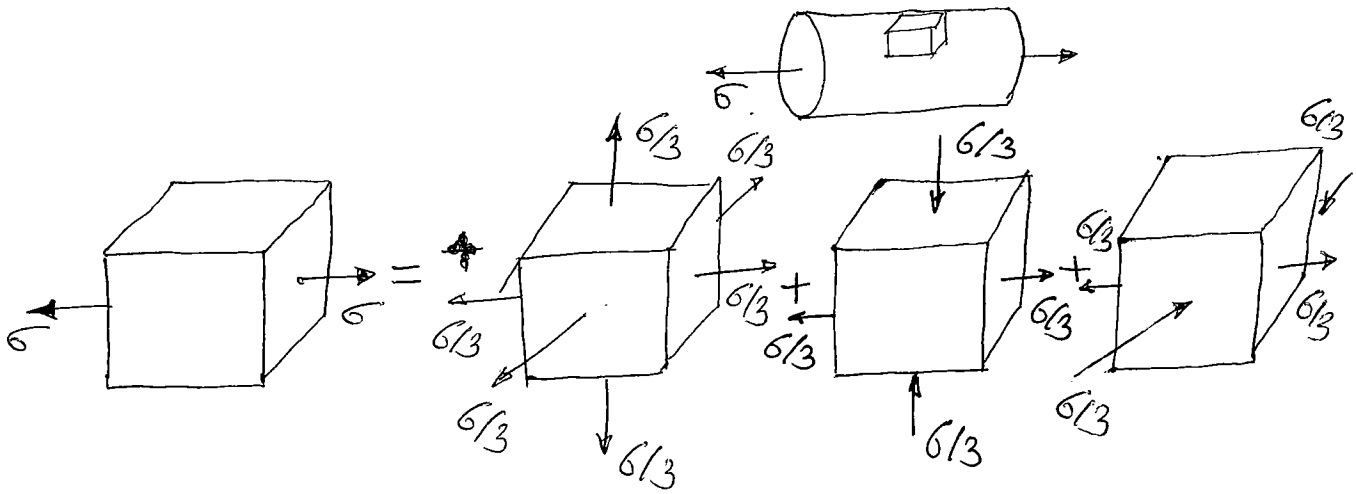

NewtonDesk.com

= Volume change + Distortion + Distortion

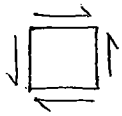

$$\sigma = \begin{bmatrix} 2 & 0 \\ 0 & -2 \end{bmatrix} = \begin{bmatrix} 0 & 2 \\ 2 & 0 \end{bmatrix} \text{ shear}$$

$$= \begin{bmatrix} 6/3 & 0 \\ 0 & -6/3 \end{bmatrix}$$

$$E = 3K(1-2\mu)$$

$$= 3\frac{\sigma}{\varepsilon_V}(1-2\mu)$$

$$\varepsilon_V = 3\frac{\sigma}{E}(1-2\mu) \quad \ldots \quad \varepsilon_V = \frac{\delta V}{V}.$$

$$\delta V = \frac{3\sigma}{E}(1-2\mu)V.$$

If $\mu = 0.5$, $\delta V = 0$.

$$U_t = \frac{1}{2E}\left[(\sigma_1^2+\sigma_2^2+\sigma_3^2) - 2\mu(\sigma_1\sigma_2+\sigma_2\sigma_3+\sigma_3\sigma_1)\right]$$

If $\mu = 0.5$ $U_t = U_d$.

$$U_d = \frac{1}{2E}\left[(\sigma_1^2+\sigma_2^2+\sigma_3^2) - (\sigma_1\sigma_2+\sigma_2\sigma_3+\sigma_3\sigma_1)\right]$$

$$= \frac{(1+\mu)}{3E}\left[(\sigma_1^2+\sigma_2^2+\sigma_3^2) - (\sigma_1\sigma_2+\sigma_2\sigma_3+\sigma_3\sigma_1)\right]$$

$$E = 2G(1+\mu)$$

$$= \frac{1}{6G}\left[(\sigma_1^2+\sigma_2^2+\sigma_3^2) - (\sigma_1\sigma_2+\sigma_2\sigma_3+\sigma_3\sigma_1)\right]$$

For simple tension.

$\sigma_1 = \sigma$, $\sigma_2 = \sigma_3 = 0$.

$$U_d = \frac{1}{6G}\sigma^2.$$

$E = 2G(1+\mu)$

$$U_d = \frac{1+\mu}{3E}\sigma^2.$$

NewtonDesk.com

Distortion energy under Complex loading > Distortion energy under simple tension at yield point - Failed

$$= \frac{1}{6G} S_{yt}^2 \quad \cdots\cdots \text{ At yeiled point}$$

$$\frac{1}{6G}\left[(\sigma_1^2+\sigma_2^2+\sigma_3^2)-(\sigma_1\sigma_2+\sigma_2\sigma_3+\sigma_3\sigma_1)\right] = \frac{1}{6G}\left(\frac{S_{yt}}{F.S}\right)^2$$

$$\frac{S_{yt}}{F.S} = \sqrt{\sigma_1^2+\sigma_2^2+\sigma_3^2-(\sigma_1\sigma_2+\sigma_2\sigma_3+\sigma_3\sigma_1)}$$

For 2D stress.

$$\frac{S_{yt}}{F.S} = \sqrt{(\sigma_1^2+\sigma_2^2-\sigma_1\sigma_2)}$$

$$x^2+y^2-xy = a^2 \quad \cdots\cdots \text{ Ellipse eq}^n.$$

$$\sigma_1^2+\sigma_2^2-\sigma_1\sigma_2 = S_{yt}^2$$

$\sigma_1 = 0 \quad \sigma_2 = \pm S_{yt}$

$\sigma_2 = 0 \quad \sigma_1 = \pm S_{yt}$.

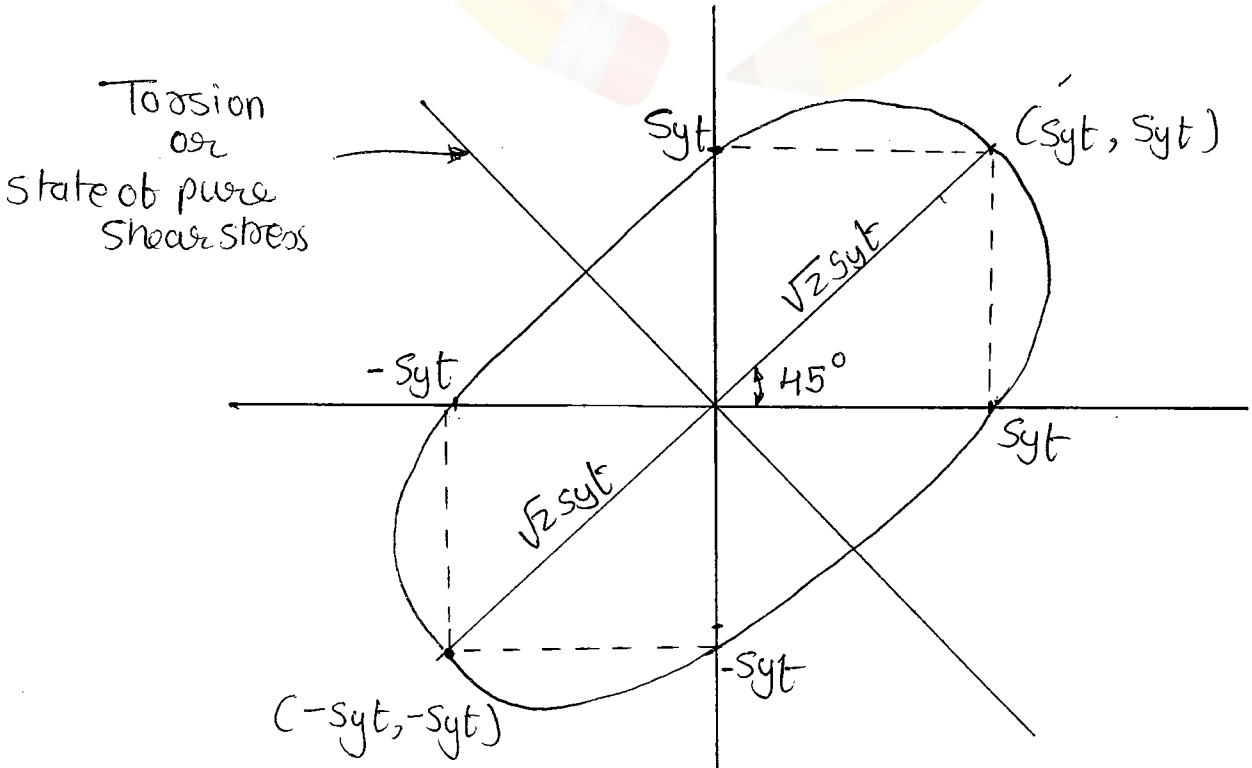

Validity - This theory gives very good results for

NewtonDesk.com

① $\sigma_1 = \frac{S_{yt}}{F.S}$ – Rankine

② $\frac{\sigma_1 - \sigma_2}{2} = \frac{S_{yt}}{F.S}$ – Guest

③ $\sigma_1 - \mu\sigma_2 = \frac{S_{yt}}{F.S}$ – St venent

④ $\sigma_1^2 + \sigma_2^2 - 2\mu\sigma_1\sigma_2 = \left(\frac{S_{yt}}{F.S}\right)^2$ – Haigh's

⑤ $\sigma_1^2 + \sigma_2^2 - \sigma_1\sigma_2 = \left(\frac{S_{yt}}{F.S}\right)^2$ – Von Moises

Q A component is subjected to torsion, T. Estimate the permisseble value of shear stress τ according to different theories of failure in terms of yield strength, S_{yt} Take $\mu = 0.3$ $E = 2.1 \times 10^5$ N/mm²

Ans ① Rankines $\sigma_1 = \frac{S_{yt}}{F.S}$ =

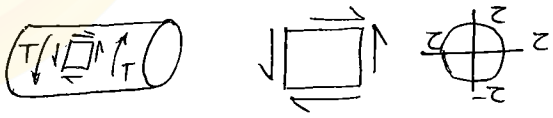

$$\sigma = \begin{bmatrix} 0 & \tau \\ \tau & 0 \end{bmatrix} = \begin{bmatrix} \tau & 0 \\ 0 & -\tau \end{bmatrix}$$

$\sigma_1 = S_{yt}$

$\tau = S_{yt}$

$\frac{\tau}{S_{yt}} = 1$

Exp. value → $S_{sy} = 0.57$ to 0.6 of S_{yt}

② Guest (most conservative theory)

$$\frac{\sigma_1 - \sigma_2}{2} = \frac{S_{yt}}{2F.S}$$

$$\tau - (-\tau) = S_{yt}$$

$$2\tau = S_{yt} \qquad \tau = \frac{S_{yt}}{} = 0.5 S_{yt}$$

NewtonDesk.com

③ St venents theory

$$\sigma_1 - \mu\sigma_2 = S_{yt}$$

$$\tau - 0.3 \times (-\tau) = S_{yt}$$

$$\tau = \frac{S_{yt}}{1.3}$$

$$\tau = 0.769\, S_{yt}, \quad \frac{\tau}{S_{yt}} = 0.769$$

④ Haigh's theory

$$\sigma_1^2 + \sigma_2^2 - 2\mu\sigma_1\sigma_2 = S_{yt}^2$$

$$\tau + (-\tau)^2 - 2\mu(\tau)(-\tau) = S_{yt}^2$$

$$\tau = 0.63\, S_{yt}$$

⑤ Von moises.

$$\sigma_1^2 + \sigma_2^2 - \sigma_1\sigma_2 = S_{yt}^2$$

$$\tau^2 + (-\tau)^2 - \tau(-\tau) = S_{yt}^2$$

$$2\tau^2 + \tau^2 = S_{yt}^2 \quad \text{(more economical)}$$

$$\tau = 0.577\, S_{yt}$$

Note:-

1. Use of guest theory increase size hence increase more cost and create bulky parts

NewtonDesk.com

Bending Equation.

$$M = \underbrace{M_x \hat{i}}_{\text{Torsion}} + \underbrace{M_y \hat{j} + M_z \hat{k}}_{\text{Bending}}$$

$$M = M_x i + M_z k$$

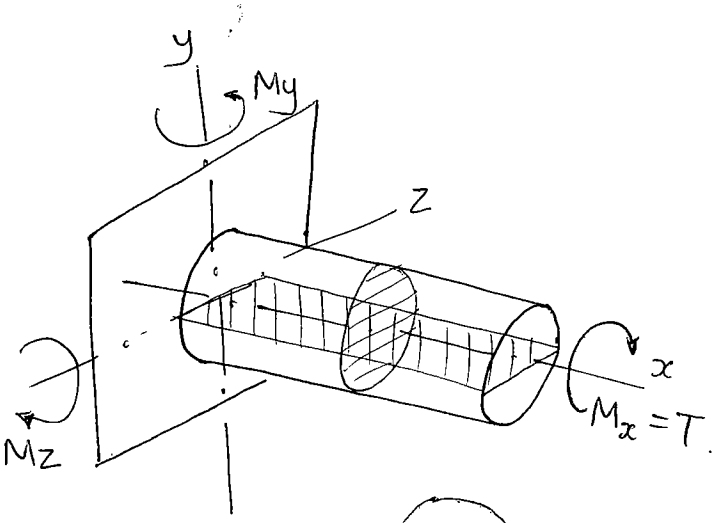

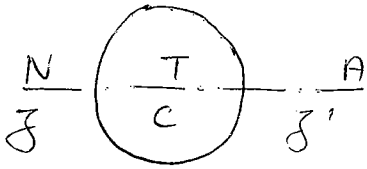

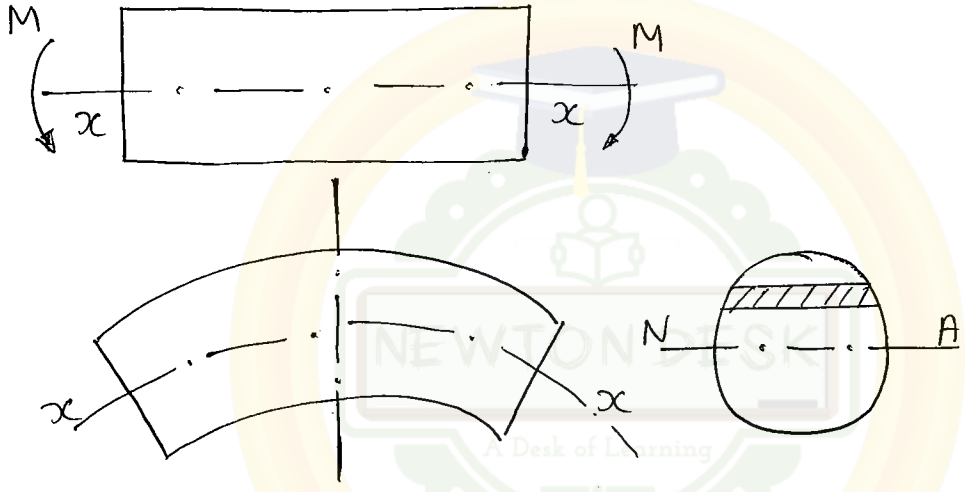

$$\frac{M}{I} = \frac{\sigma_b}{y} = \frac{E}{R}.$$

M = Bending moment

I = M.I of c/s about neutral axis

σ_b = Bending stress

y = Distance measured from Neutral axis.

R = Radius measured from neutral axis.

$$I = \frac{\pi}{64} d^4$$

$$= \frac{\pi}{64}(D_o^4 - d_i^4)$$

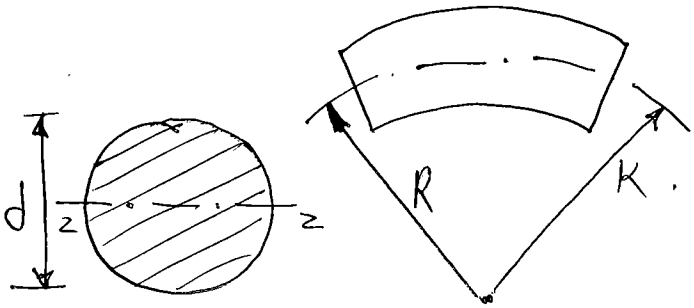

NewtonDesk.com

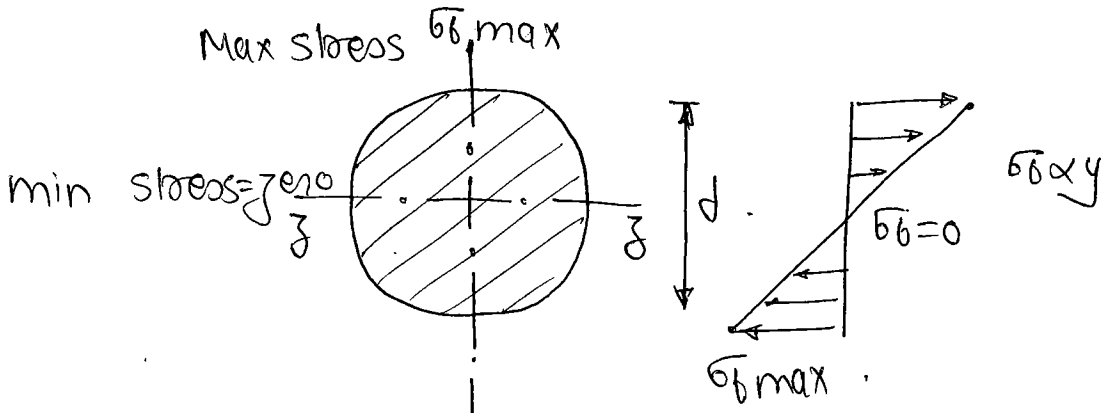

If $y = r$ $\sigma_b = \frac{r}{R} \sigma_{max}$

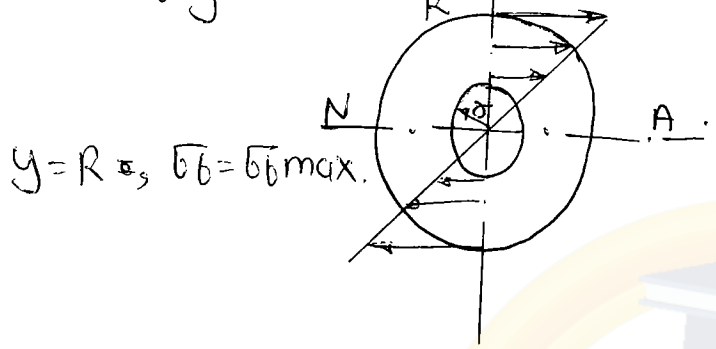

$y = R$, $\sigma_b = \sigma_b$ max.

Along the N-A. Hence σ_b min is zero.

Torsion Equation

$\tau \propto r$ $\quad \boxed{\frac{T}{J} = \frac{\tau}{r}} = \frac{G\theta}{l}$

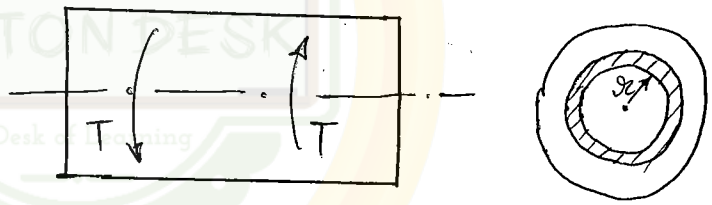

T = Torsion

J = Polar moment of Inertia.

$= I_{xx} + I_{yy} = \frac{\pi}{32} d^4$

$= \frac{\pi}{32} (D^4 - d^4)$

τ = Shear stress at radius R

G = Modulus of rigidity

θ = Angle of twist.

l = length of member under torsion

NewtonDesk.com

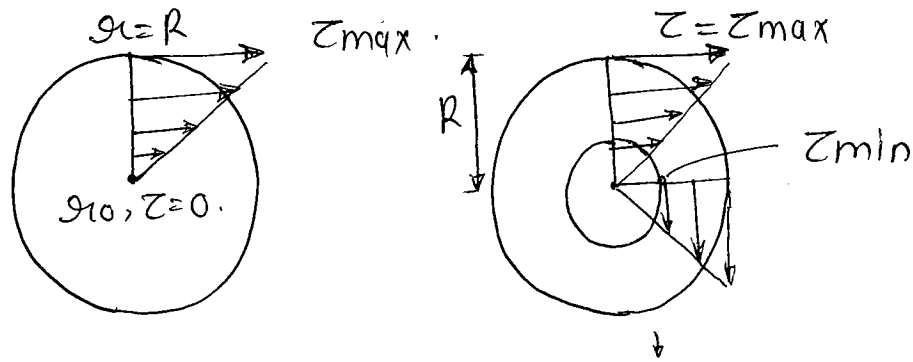

$$\tau_{min} = \frac{r}{R}\,\tau_{max}$$

For solid.

For hollow.

Von mises eqn for Axial (Bending) and torsion loading.

$$\left[\sigma_1^2 + \sigma_2^2 - \sigma_1\sigma_2\right]^{1/2} = \frac{S_{yt}}{F.S} = \sigma_{equivalent}$$

for A.

$\sigma_x = \sigma$

$\sigma_y = 0$.

$$\sigma_1 = \frac{\sigma}{2} + \sqrt{\left(\frac{\sigma}{2}\right)^2 + \tau^2}.$$

$\sigma_1 = \sigma/2 + R$

$\sigma_2 = \sigma/2 - R$.

put in eqn

$$\left[\left(\sigma/2 + R\right)^2 + \left(\sigma/2 - R\right)^2 - \left(\sigma/2 + R\right)\left(\sigma/2 - R\right)\right]^{1/2} = \sigma_{equivalent}$$

$$\left[\left(\sigma/2\right)^2 + 3R^2\right]^{1/2} = \sigma_{eq}$$

NewtonDesk.com

$$\left[\left(\frac{\sigma}{2}\right)^2 + 3\left\{\sqrt{\left(\frac{\sigma}{2}\right)^2 + \tau^2}\right\}^2\right]^{1/2} = \sigma_{eq}$$

$$\left[\left(\frac{\sigma}{2}\right)^2 + 3\left(\frac{\sigma}{2}\right)^2 + 3\tau^2\right]^{1/2} = \sigma_{eq}.$$

$$\left[4\left(\frac{\sigma}{2}\right)^2 + 3\tau^2\right]^{1/2} = \sigma_{eq}.$$

$$2\cdot\frac{\sigma}{2} + \tau(1+3)^{1/2} = \sigma_{eq}.$$

$$\boxed{\sigma_{eq} = \sqrt{\sigma^2 + 3\tau^2}.}$$

Q: The homogeneous state of stress for a metal part undergoing plastic deformation is

$$T = \begin{bmatrix} \sigma_{xx} & \tau_{xy} & \tau_{xz} \\ 10 & 5 & 0 \\ \tau_{xy} & \sigma_{yy} & \tau_{yz} \\ 5 & 20 & 0 \\ \tau_{zx} & \tau_{zy} & \sigma_{zz} \\ 0 & 0 & -10 \end{bmatrix}$$

where the stress component value are in MPa. using Von moises yield criterism.

a] 9.50 b] 16.07 c] 28.52 d] 19.41

$$\sigma_1 = \frac{\sigma_x + \sigma_y}{2} + \sqrt{\left(\frac{\sigma_x - \sigma_y}{2}\right)^2 + \tau_{xy}^2}.$$

$$= \frac{10+20}{2} + \sqrt{\left(\frac{10-20}{2}\right)^2 + 5^2}$$

$$= 22.071.$$

$$\sigma_2 = \frac{\sigma_y + \sigma_z}{2} + \sqrt{\left(\frac{\sigma_y - \sigma_z}{2}\right)^2 + \tau_{yz}^2}$$

$$= \frac{20+-10}{2} + \sqrt{15^2 + 5^2}$$

$$= 7.93.$$

NewtonDesk.com

$\sigma_3 = -10 \text{ mpa}$.

$$\frac{S_{yt}}{F_S} = \sigma_{eq} = \sqrt{\sigma_1^2 + \sigma_2^2 + \sigma_3^2 - (\sigma_1\sigma_2 + \sigma_2\sigma_2 + \sigma_3\sigma_1)}$$

$$= 27.83.$$

$$\tau = 0.557\ \sigma_{eq}.$$

$$= 0.557 \times 27.83$$

$$= 16.057.$$

6. Mohr's Theory (Coloumb - Mohr's theory)

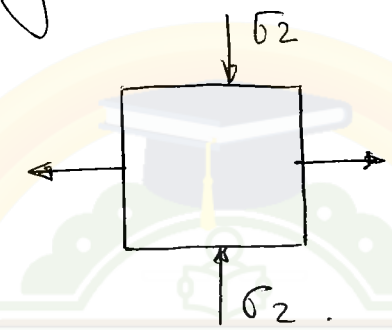

For Ductile $S_{yt} = S_{yc}$ (isotropic - Assumption)

$$\sigma_1 - \sigma_2 = \frac{S_{yt}}{F_S}.$$

$$\frac{\sigma_1}{S_{yt}} - \frac{\sigma_2}{S_{yt}} = \frac{1}{F_S}$$

For Brittle Material ($S_{yt} \neq S_{yc}$)

$$\frac{\sigma_1}{S_{yt}} - \frac{\sigma_2}{S_{yc}} = \frac{1}{F.S}.$$

NewtonDesk.com

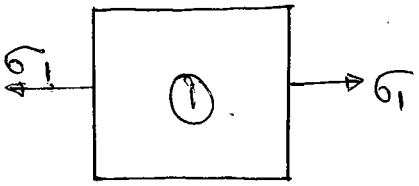

$$\frac{\sigma_1}{S_{ut}} - \frac{\sigma_2}{S_{ut}} = \frac{1}{F.S}$$

$\sigma_2 = 0$.

$\sigma_1 = S_{ut}$.

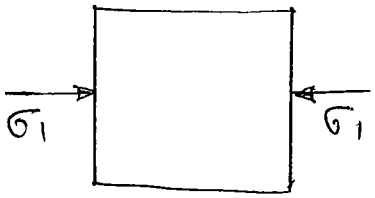

$$\frac{-\sigma_1}{S_{ut}} - \frac{\sigma_2}{S_{uc}} = \frac{1}{F.S}$$

$\sigma_2 = 0$.

$S_{ut} = -\sigma_1$

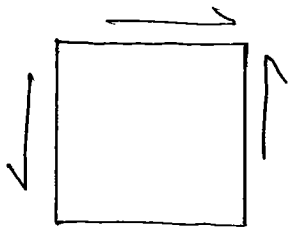

Pure shear

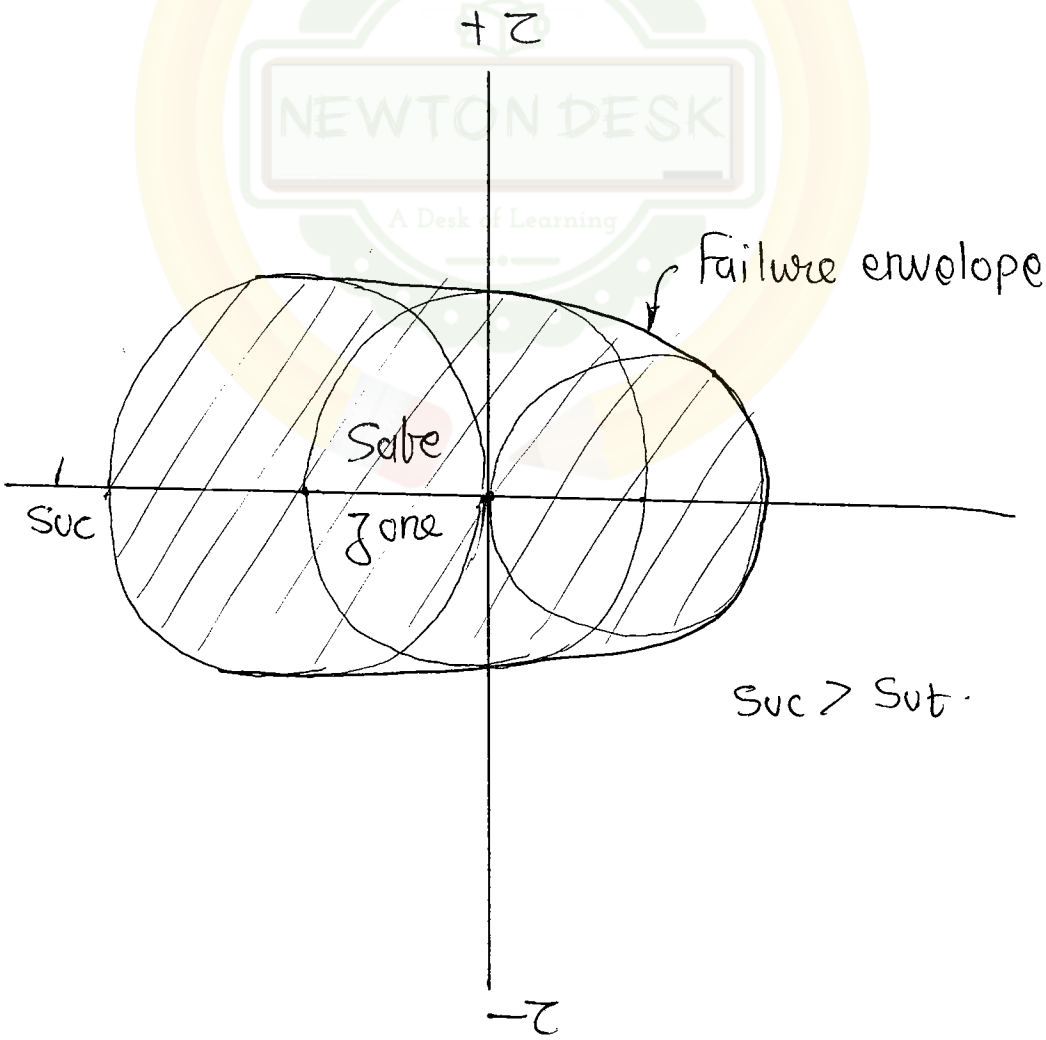

$S_{uc} > S_{ut}$.

Design for Brittle material

NewtonDesk.com

Q. A steel pin subjected to a shear force 25 kN and the direct compression of 41 kN. The permissible compressive stresses in pin material is 50 MPa, then the suitable dia of pin according to distortion energy theory is

a] 75 mm b] 38 mm c] 20 mm d] 45 mm.

$$T = \frac{\pi}{16} f_s d^3$$

$f_s = 25\,kN$. $\sigma_{eq} = \sqrt{\sigma^2 + 3\tau^2}$.

$F_t = 41\,kN$.

$$50 = \sqrt{\left(\frac{41}{A}\right)^2 + 3\left(\frac{25}{A}\right)^2} = 59.63$$

$$= \sqrt{\frac{41^2 + 3\times 25^2}{A^2}}$$

$$A = \frac{2\sqrt{889}}{50}$$

$$A = 1192.64$$

$$\frac{\pi}{4} d^2 = 1192.64$$

$$\boxed{d = 38\,mm}$$

Q A load P 45 kN is applied to a crank shaft of dia. 90 mm at a distance of 200 mm from bearing. The material is 30 C4 with $S_{yt} = 315$ MPa. Factor of safety according to Guest's theory is

a] 1 b] 2 c] 3 d] 4.

$$\frac{\sigma_1 - \sigma_2}{2} = \frac{S_{yt}}{2 FS}$$

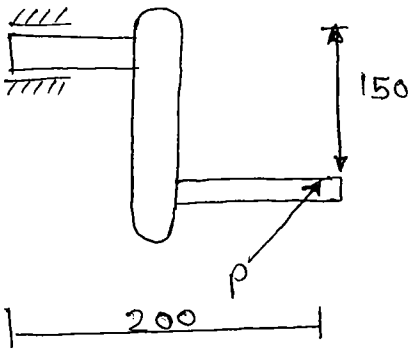

load p is applied ⊥ or to plane of paper.

(torsion) $T = P \times 150$
$= 45 \times 150$
$= 6750$ kN-mm

(Bending) $M = P \times 200$
$= 45 \times 200$
$= 9000$ kN-mm

$$T = \frac{\pi}{16} f_s d^3$$

0.047

NewtonDesk.com

$$\sigma_b = \frac{32M}{\pi d^3}$$

$$= \frac{32 \times 9000}{\pi \times 90^3}$$

$$= 0.125 \ KN/mm^2$$

$$= 125.75 \ N/mm^2$$

$$\tau_{max} = \sqrt{\left(\frac{\sigma_b}{2}\right)^2 + \tau^2}$$

$$= \sqrt{\left(\frac{125.75}{2}\right)^2 + (47.15)^2}$$

$$= 78.59$$

$$\tau_{max} = \frac{S_{yt}}{2 \times F.S}$$

$$78.59 \times 2 \times F_s = 315$$

$$\boxed{F_s = 2}$$

~~Q~~ ~~A component subjected to Fluxtuating stresses~~

NewtonDesk.com

Desing for Fatigue.

A component is subjected to a fluctuating stresses fails at a stress much below their static strength. This phenomenon is called as Fatigue.

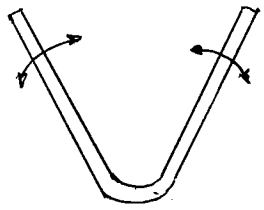

Wohler - Fatigue.

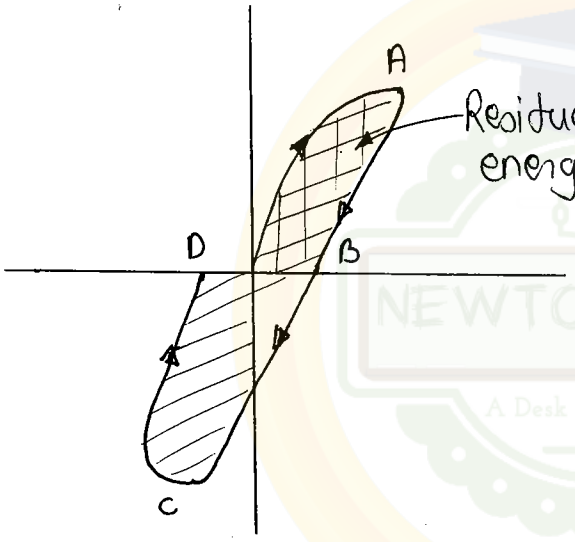

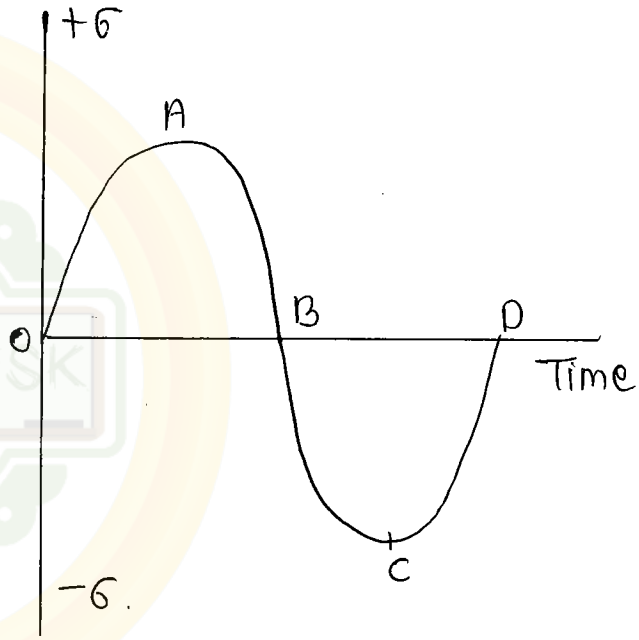

Ex:- 100 KN - strength.
10 KN - Residual ↑ then strength become 90 KN ↓

Terminology.

1]

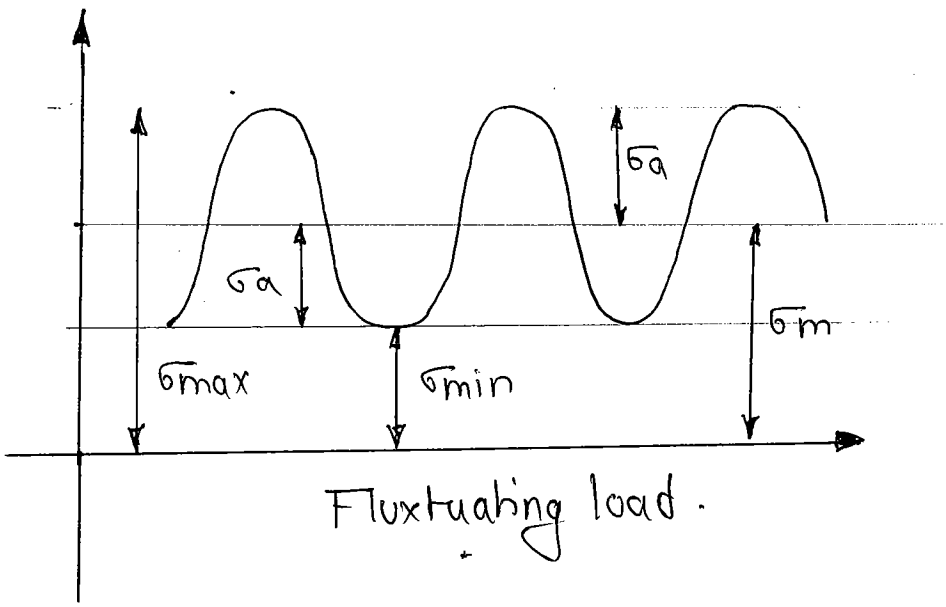

NewtonDesk.com

mean stress, $\sigma_m = \dfrac{\sigma_{max} + \sigma_{min}}{2}$

Stress amplitude $\sigma_a = \dfrac{\sigma_{max} - \sigma_{min}}{2}$

Stress Ratio, $R = \dfrac{\sigma_{min}}{\sigma_{max}}$.

2]

Repeated stress ($\sigma_m = \sigma_a$)

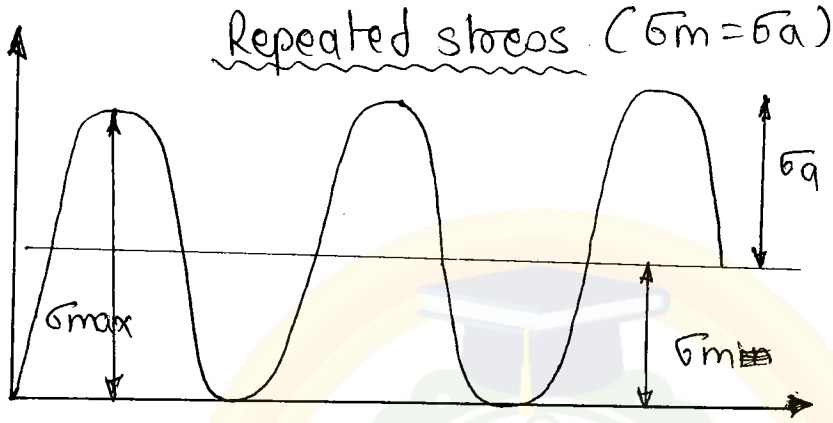

$$\sigma_m = \frac{\sigma_{max} + \sigma_{min}}{2} = \frac{\sigma + 0}{2} = \sigma/2.$$

$$\sigma_a = \frac{\sigma_{max} - \sigma_{min}}{2} = \frac{\sigma + 0}{2} = \sigma/2$$

$$R = \frac{\sigma_{min}}{\sigma_{max}} = 0.$$

3]

Completely Reversible

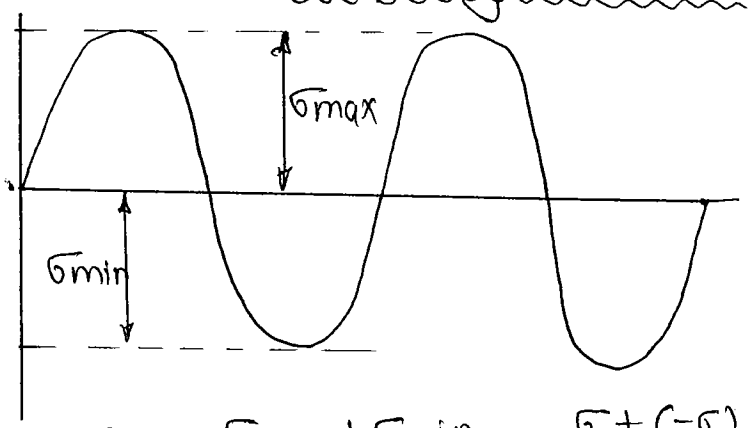

$$\sigma_m = \frac{\sigma_{max} + \sigma_{min}}{2} = \frac{\sigma + (-\sigma)}{2} = 0$$

$$\sigma_a = \frac{\sigma_{max} - \sigma_{min}}{2} = \frac{\sigma - (-\sigma)}{2} = \frac{2\sigma}{2} = \sigma.$$

$$R = \frac{\sigma_{min}}{\sigma_{max}} = \frac{-\sigma}{\sigma} = -1.$$

NewtonDesk.com

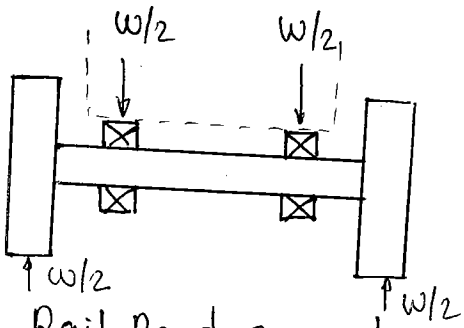

a] Rail Road car axle.

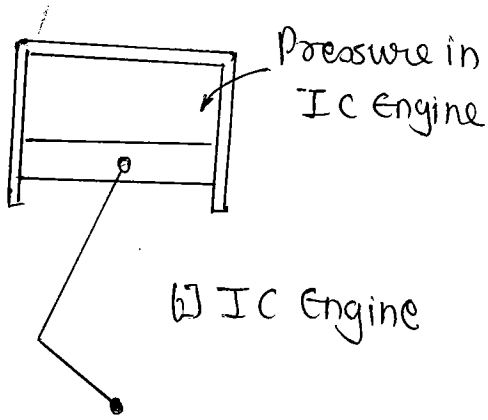

b] IC Engine

c]

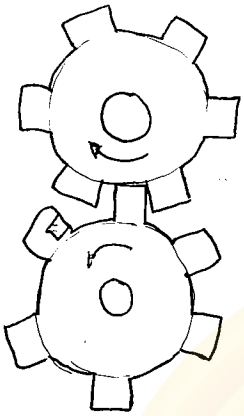

Gears

D]

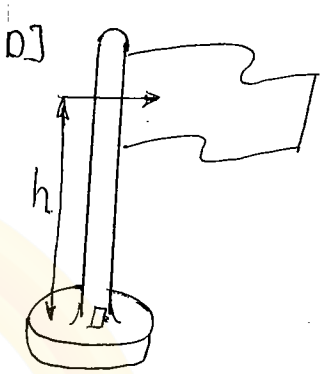

Fluctuating flag.

E.

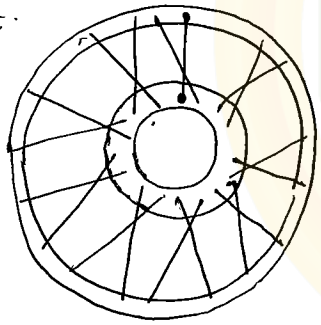

wheel.

Axle → stationary or rotating member and is loaded in bending.

a]

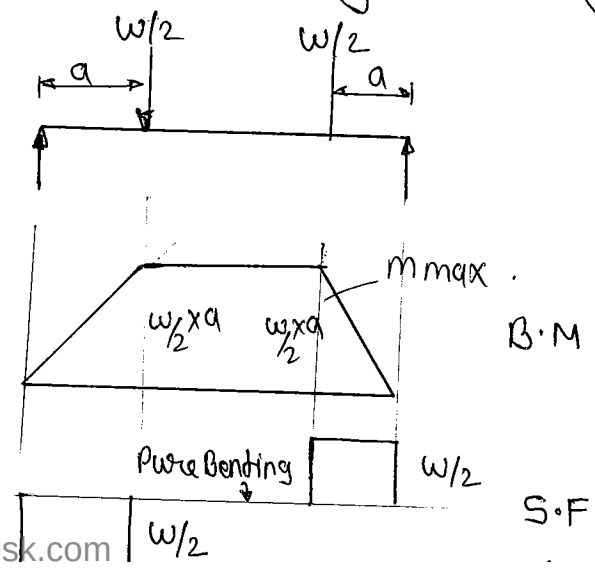

$$\sigma_b = \frac{32\,M_{ax}}{\pi d^3}.$$

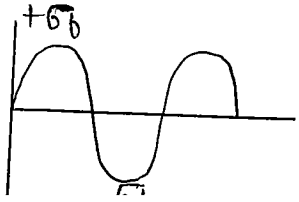

NewtonDesk.com

B] I C Engine.

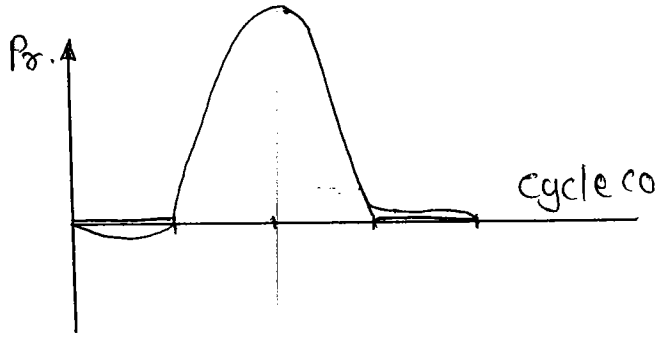

cycle continue hence Repeated load.

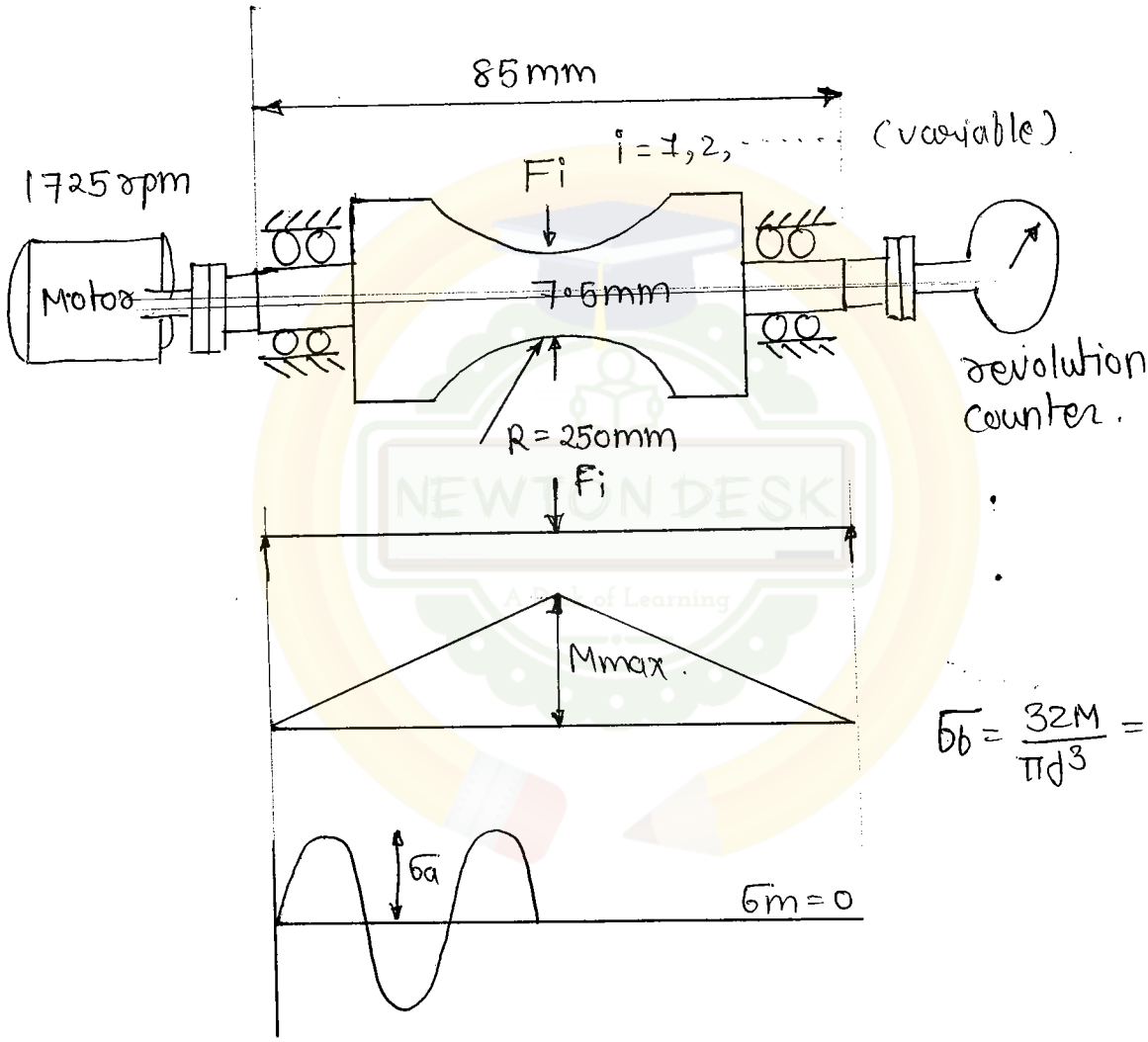

$$\sigma_b = \frac{32M}{\pi d^3} = \sigma_a.$$

	load	speed rpm
σ_{a1} =	F_1	N_1
σ_{a2} =	F_2	N_2
σ_{a3} =	F_3	N_3
	⋮	⋮

NewtonDesk.com

(S-N curve)

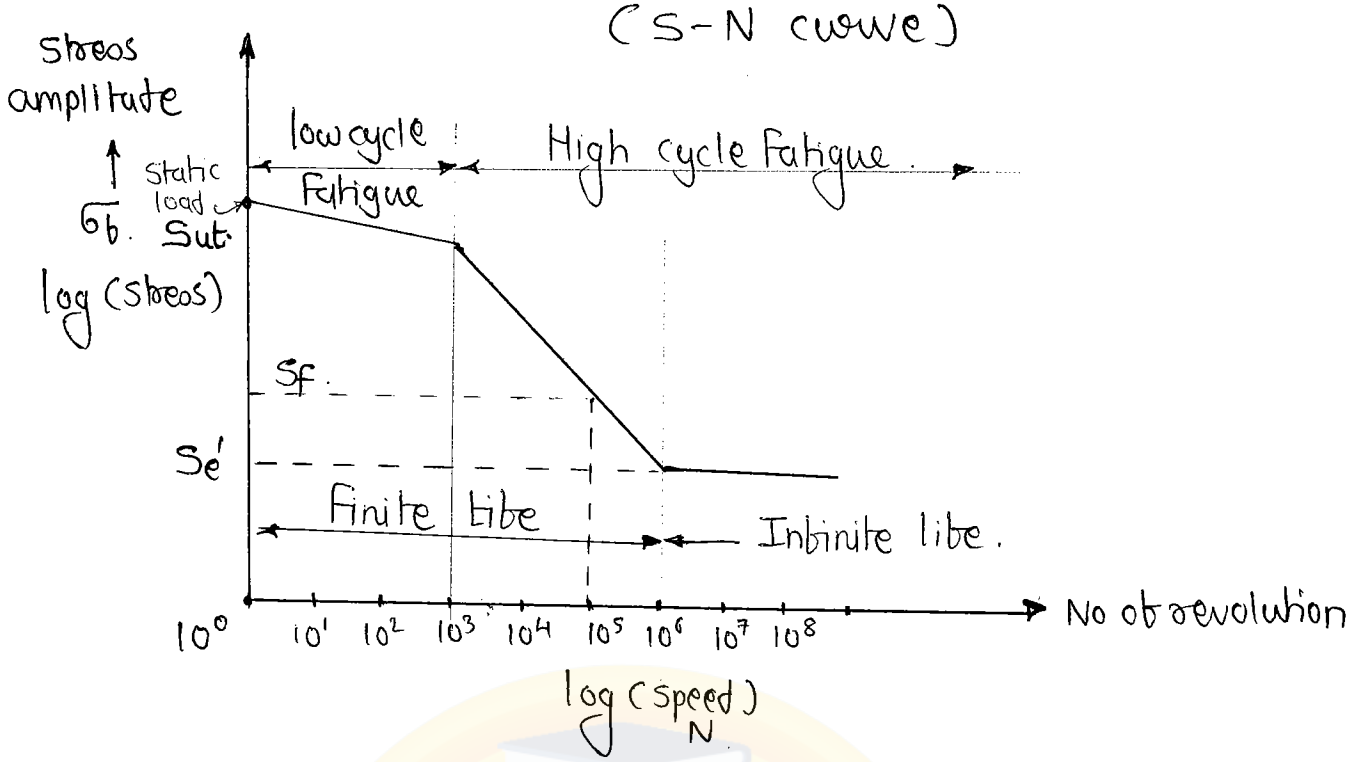

Endurance strength (Se')

It is the maximum value of a completely reversible bending stress which a standard polished specimen can withstand for a a minimum life of one million revolution.

Stress of finite life expressed as fatigue strength
Stress of infinite life expressed as endurance limit.

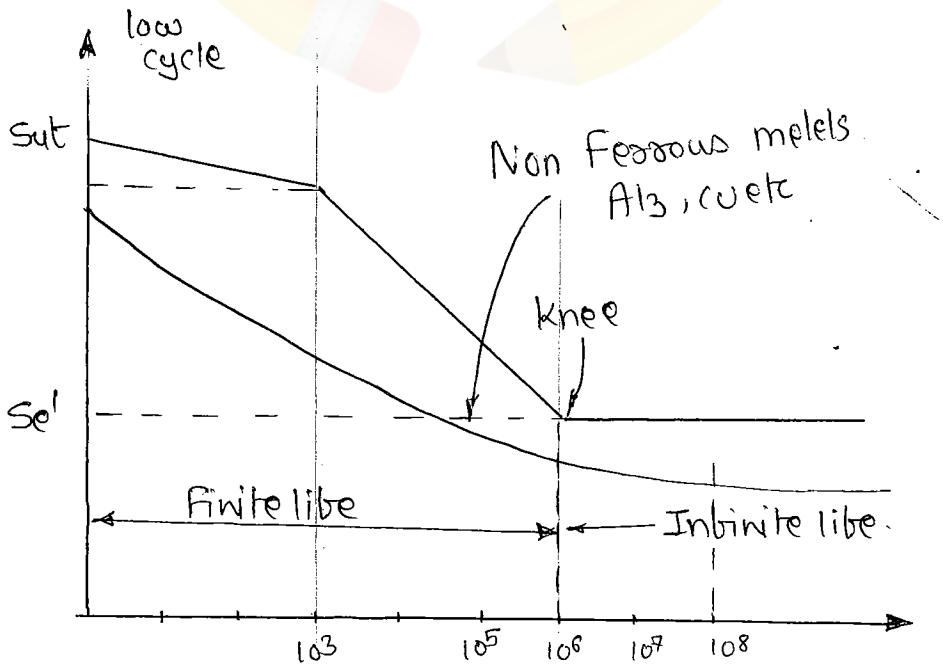

NewtonDesk.com

10^6 rev — 9.6 hr.

10^8 rev — 9.6 x 100

$= \frac{960 \text{ hr}}{24} = 40.2$ days

$= 1\frac{1}{2}$ months.

Emparical relation

For steel – $S_e' = 0.5\, S_{ut}$ if $S_{ut} < 1400$ MPa

$= 700$ MPa if $S_{ut} \geq 1400$ MPa.

For C.I $S_e' = 0.4\, S_{ut}$

For non ferrous metarials.

$S_e' = 0.3\, S_{ut}$

Factors affecting the eturence strength of component

Corrected enturence strength

$S_e = K_a K_b K_c K_d K_e K_f \cdots\cdots S_e'$

1) Surface finish factor (K_a)

$K_a = 1$ for polised specimen.

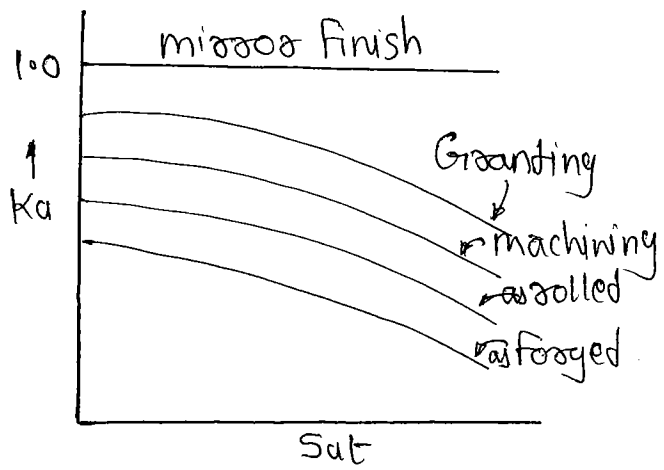

NewtonDesk.com

2] K_b = Size Factor

$K_b = 1 \quad d \leq 8mm$

$= 1.189 d^{-0.097}$

As dia of component increases the value of size factor reduces

$D \uparrow \quad K_b \downarrow$

3] K_e = Reliability Factor

$= 1$ 50% reliability

$= 0.897$ 90% "

4] K_e = load factor.

$= 1$. Completely reversed bending.

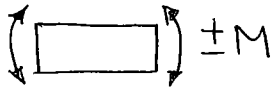

$= 0.7$ to 0.8 (If two values limit is given & select list one)

Ex:- Connecting rod

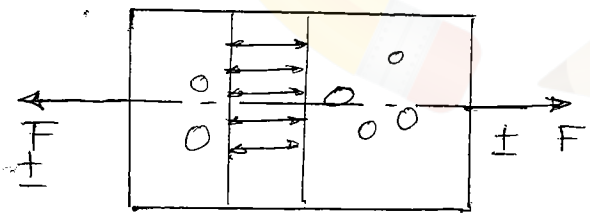

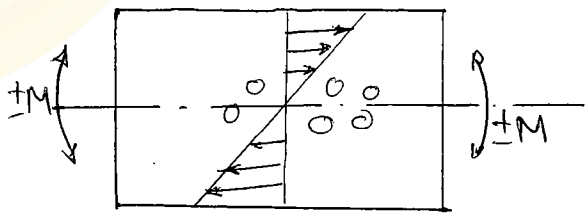

5] K_g = Temperature factor

$= 1 \quad T < 300^\circ C$

$= 0.5 \quad T > 300^\circ C$

NewtonDesk.com

K_d = Modifying stress Concentration Factor

$= \frac{1}{K_f}$.

K_f = Actual stress concentration Factor

Stress concentration

Localised high stress near the discontinuity is called stress concentration

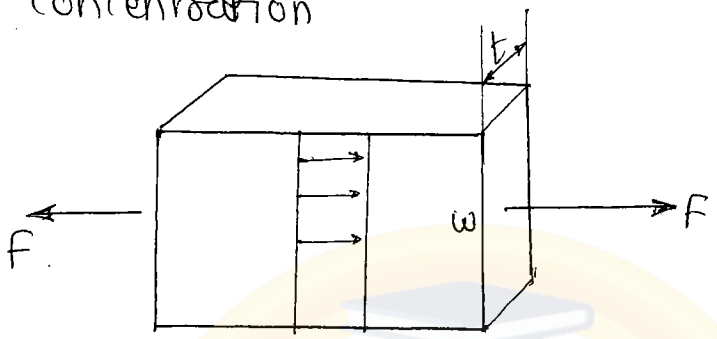

$\sigma_{uniform} = F$

$= F/w \times t$

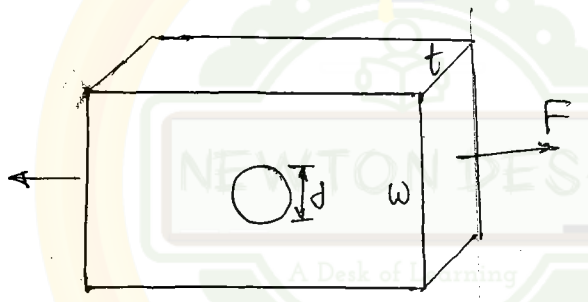

$\sigma_0 = \frac{F}{(w-d)t}$

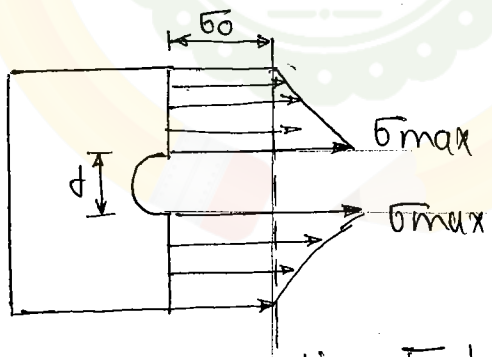

Theoratical stress concentration Factor,

$K_t = \frac{\text{Maximum stress near the discontinuity}}{\text{Nominal stress obtained by min area of C/s}}$.

$K_t = \frac{\sigma_{max}}{\sigma_0}$.

$\sigma_0 = \sigma_{uniform}$ $(d << w)$

NewtonDesk.com

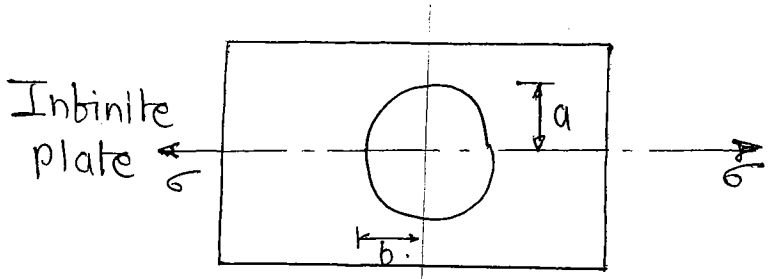

$$\sigma_{max} = \sigma\left(1 + \frac{2a}{b}\right) \qquad (\sigma_0 = \sigma)$$

i] If $a = 0$.

$\sigma_{max} = \sigma$

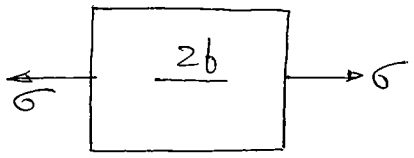

ii] If $b = 0$

$\sigma_{max} = \infty$

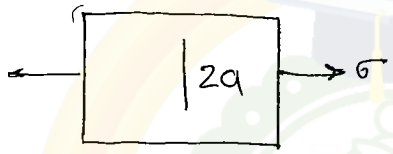

iii] If $a = b$. A circular hole

$\sigma_{max} = 3\sigma$.

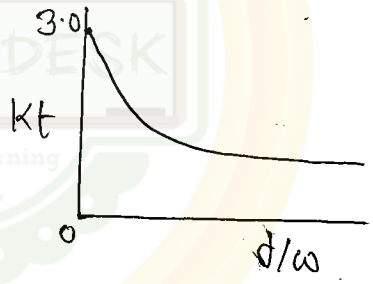

Methods of determining, K_t.

1] Methamatical analysis
theory of elasticity

2] Experimental method
- a] Photoelasticity.
- b] Brittle Coating
- c] Strain gauge method.
- d] Grid method.

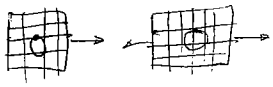

3] Computer based

NewtonDesk.com

Notch Sensitivity Factor (q)

The degree to which the effect of theoratical stress concentration is actually reached

$$q = \frac{\text{Increase of actual stress over nominal stress}}{\text{Increase theoratical stress over nominal stress}}$$

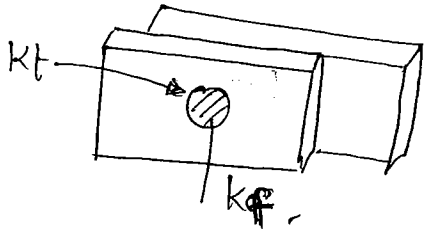

$$K_f = \frac{\sigma_{max\,actual}}{\sigma_o}$$

$$\sigma_{max\,actual} = K_f\,\sigma_o$$

$$\text{Increase} = K_f\sigma_o - \sigma_o$$

$$K_t = \frac{\sigma_{max}}{\sigma_o}$$

$$\sigma_{max} = K_t\sigma_o$$

$$\text{Increased} = K_t\sigma_o - \sigma_o$$

$$q = \frac{K_f\sigma_o - \sigma_o}{K_t\sigma_o - \sigma_o} = \frac{(K_f - 1)\cancel{\sigma_o}}{(K_t - 1)\cancel{\sigma_o}}$$

$$= \frac{K_f - 1}{K_t - 1}$$

$$\boxed{K_f = 1 + q(K_t - 1)} \qquad q \le 1$$

If $q = 1$

$$\boxed{K_f = K_t}$$

Effect of K_t on type of Material

Type.	Static load	Fluctuating load
Ductile Material	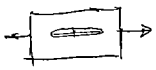 X	✓ K_t
Brittle Material	✓ K_t	✓ K_t

NewtonDesk.com

Ductile material.

$S_{yt} = 300$ MPa.

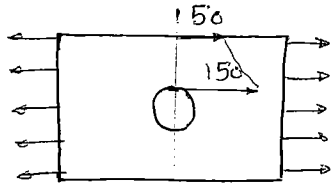

at 50 MPa

$\sigma_{max} = \sigma\left(1 + \frac{2a}{b}\right)$.

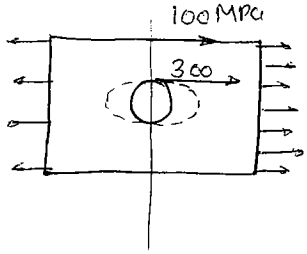

at 100 MPa, 150.

As $\sigma \uparrow$ $\sigma_{max} \downarrow$

Effect of Mean stress on endurance limit.

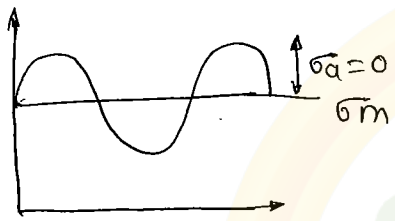

we have considered completely reverse condition

$\sigma_a = 0$ static load.

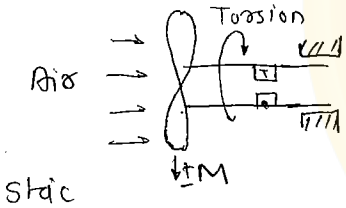

Static/mean

Completely reversed

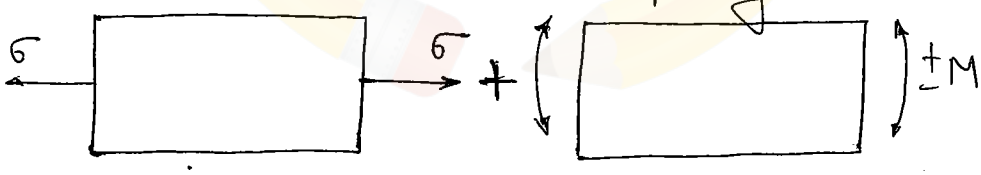

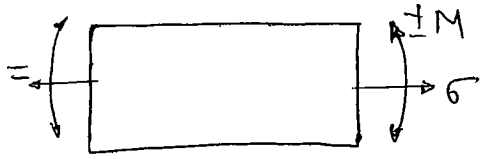

Fluxituating

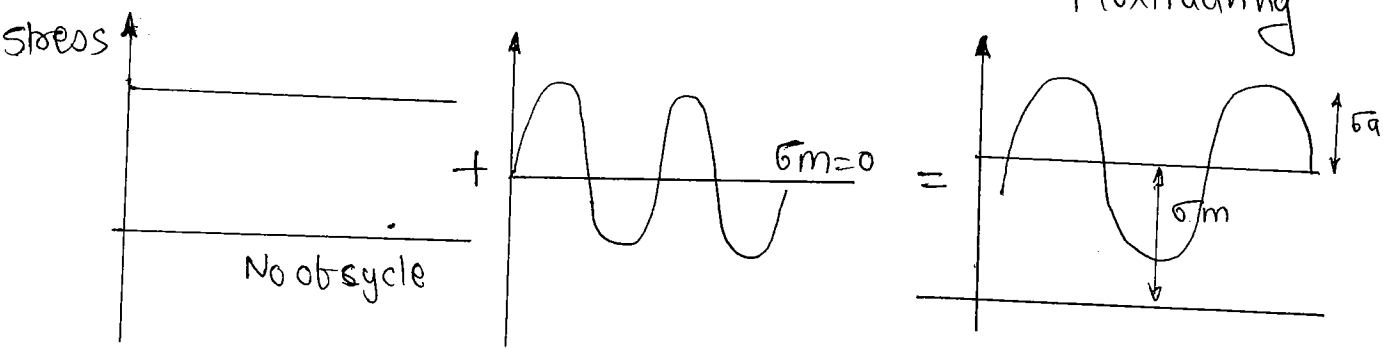

NewtonDesk.com

Ex:- ① 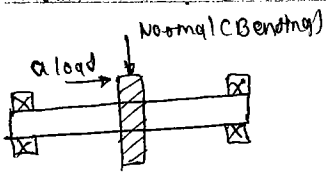

② IC Engine connecting rod

③ Preloaded ~~load~~ bolt of IC engine steam engine

④ Cycle spokes.

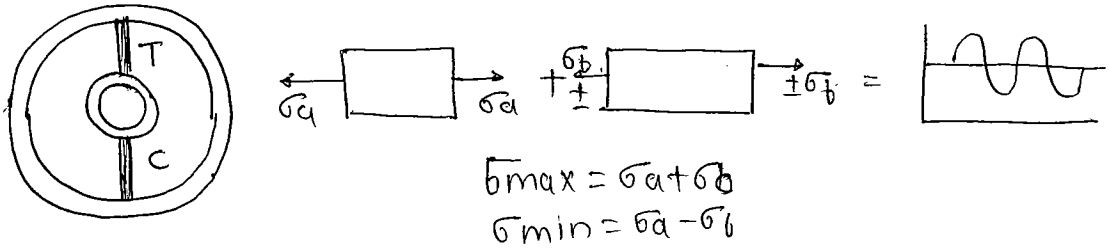

$\sigma_{max} = \sigma_a + \sigma_b$

$\sigma_{min} = \sigma_a - \sigma_b$

Effect of mean stress on Endurance strength.

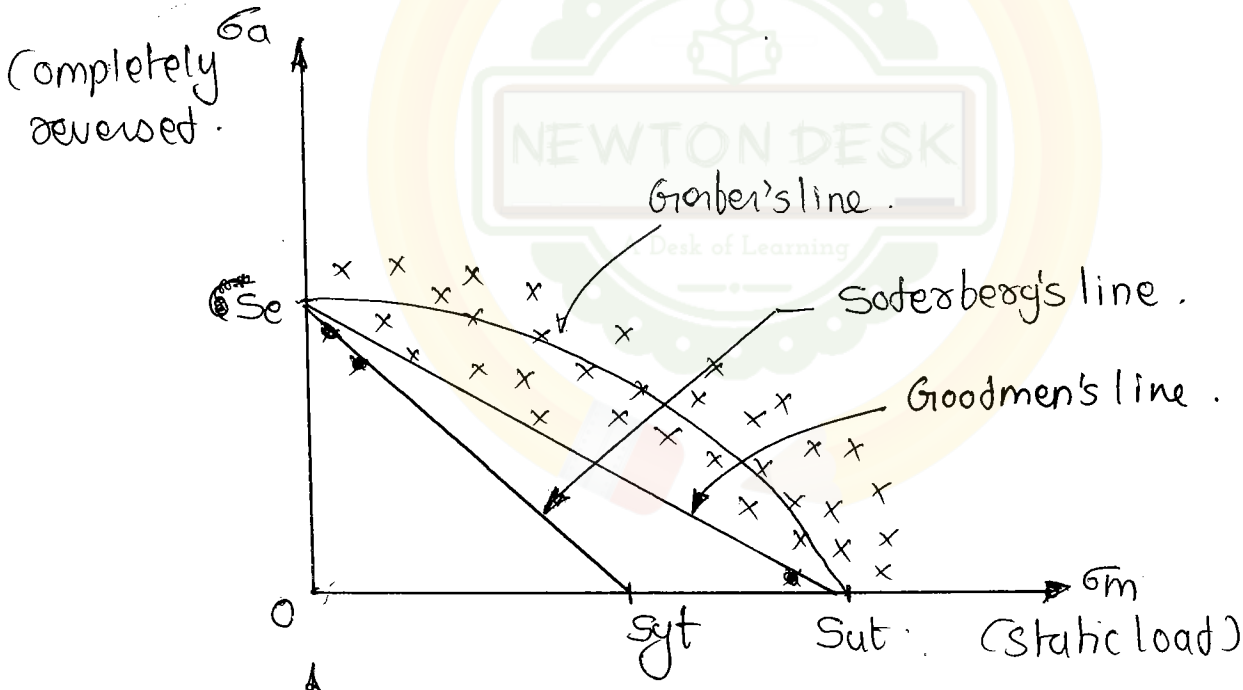

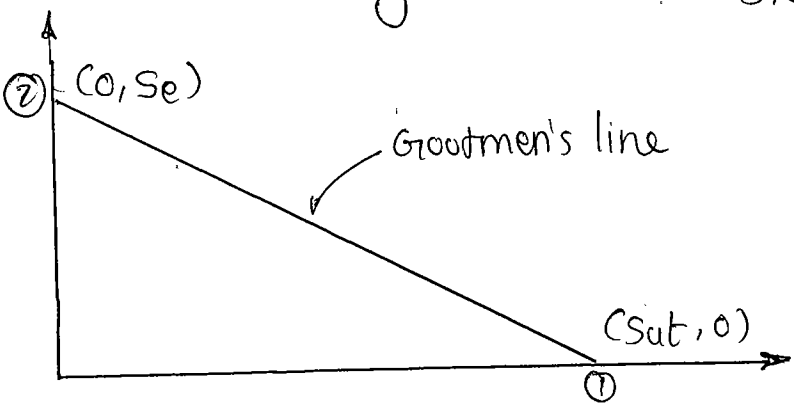

$$y - y_1 = \frac{y_1 - y_2}{x_1 - x_2}(x - x_1)$$

$$\sigma_a - 0 = \frac{0 - Se}{Sut - 0}(\sigma_m - Sut)$$

NewtonDesk.com

$$\frac{\sigma_a}{\sigma_{fae}} = -\frac{\sigma_m}{S_{ut}} + \frac{S_{ut}}{S_{ut}}$$

$$\frac{\sigma_a}{\frac{S_e}{F.S}} + \frac{\sigma_m}{\frac{S_{ut}}{F.S}} = 1.$$

$$\boxed{\frac{\sigma_a}{S_e} + \frac{\sigma_m}{S_{ut}} = \frac{1}{F.S}}$$

2] Soderberg's equations.

$$\boxed{\frac{\sigma_a}{S_e} + \frac{\sigma_m}{S_{yt}} = \frac{1}{F.S}}$$

3] Gerber's equation.

$$\frac{\sigma_a}{S_e} + \left(\frac{\sigma_m}{S_{ut}}\right)^2 = 1.$$

$$\boxed{\frac{\sigma_a}{S_e/F.S} + \left(\frac{\sigma_m}{S_{ut}/F.S}\right)^2 = 1}$$

Q :- A steel plate shown in fig is subjected to completely reversed load of 16 kN. The plate is made of steel (S_{ut} = 440 MPa), $q = 0.8$, $k_a = 0.67$, $k_b = 0.85$, $k_c = 0.9$, $k_f = 0.897$, $k_t = 2.35$ and $F.S = 1.5$

a] Then the plate thickness for infinite life is

a] 6mm b] 12mm c] 20mm d] 30mm

b] Optimum thickness is obtaind by

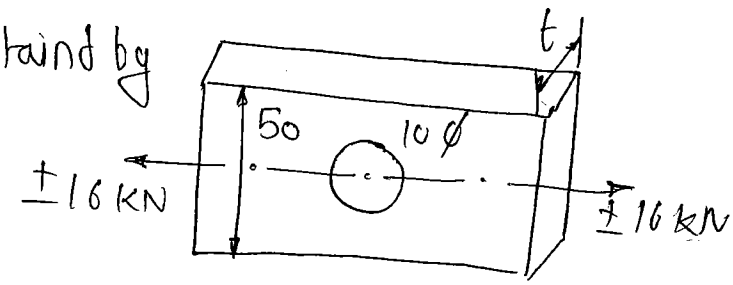

a] Gerber's Method

b) Goodmen eqn

c] Soderber's eqn

d] Both Goodmen & Soderbergs method

NewtonDesk.com

$$\frac{\sigma_a}{S_e} + \cancel{\frac{\sigma_m}{S_{ut}}}^{0} = \frac{1}{F_S}$$ Goodmen

$$\frac{\sigma_a}{S_e} + \cancel{\frac{\sigma_m}{S_{yt}}}^{0} = \frac{1}{F_S}$$ Soderberge.

Ans d]

$$\frac{\sigma_a}{S_e} = \frac{1}{F.S}$$

$F = \pm 16\,kN$
$S_{ut} = 440\,MPa$
$q = 0.8$
$K_a = 0.67$
$K_b = 0.85$
$K_c = 0.9$
$K_d = 0.897$
$t = ?$
$F_S = 1.5$
$K_t = 2.35$ - It given then

$$S_e = K_a K_b K_c K_e \cdots S_e'$$
$$= 0.67 \times 0.85 \times 0.9 \times 0.897 \times \frac{1}{2.08} \times 220$$
$$= 48.62\,MPa.$$

$$S_e' = 0.5\,S_{ut}$$
$$= \underline{440 \times 0.5} \quad \text{if} < 1400\,MPa.$$
$$= 220\,MPa$$

K_e – Modifying stress concentration factor.

$$K_e = \frac{1}{K_f} = \frac{1}{1+q(K_t-1)}$$
$$= \frac{1}{1+0.8(2.35-1)} = \frac{1}{2.08}.$$

$$\sigma_a = \frac{16 \times 10^3}{(w-d)t} = \frac{16 \times 10^3}{(50-10)t} =$$

$$\frac{\sigma_a}{S_e} = \frac{1}{F.S}$$

$$\frac{16 \times 10^3}{40 \times t} = \frac{48.62}{1.5}$$

$$\boxed{t \simeq 12\,mm}$$

NewtonDesk.com

Compressive strength of material

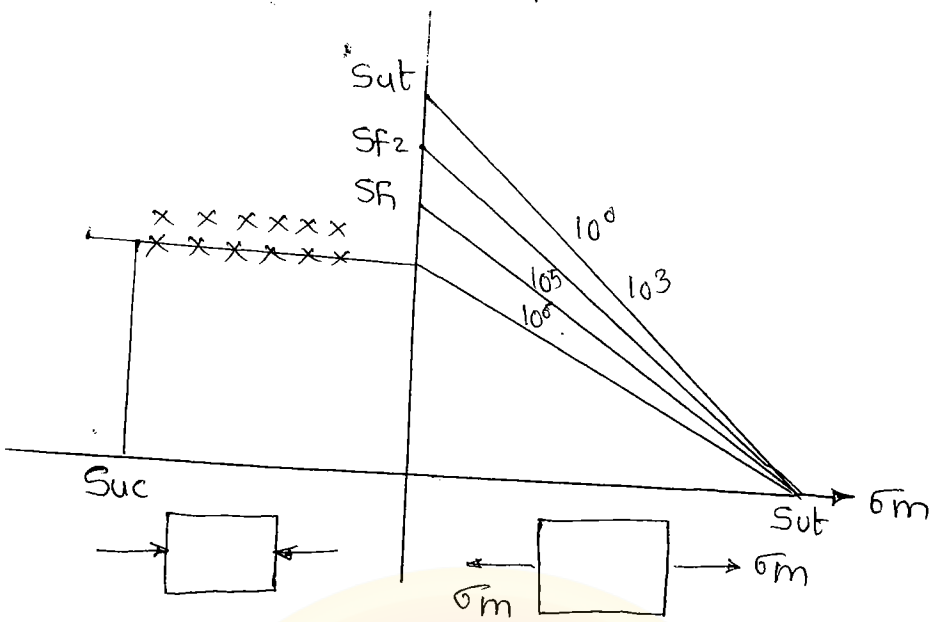

To improve Fatigue strength

1] Cold rolling
2] Burnishing
3] Shot pining.
4] Case hardning
5] Coining.

} Residual Stress OR Preloading

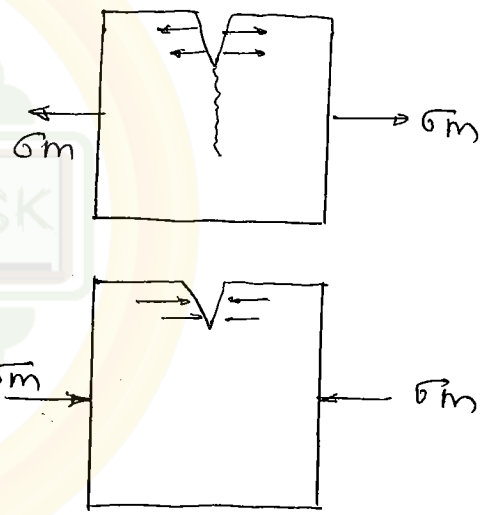

Decrese the effects of surface knotchs

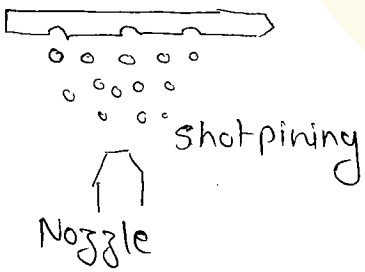

Becoz. of intention the strength is increased in case of sand casting surface scratches produce which reduces surface fatigue strength.

NewtonDesk.com

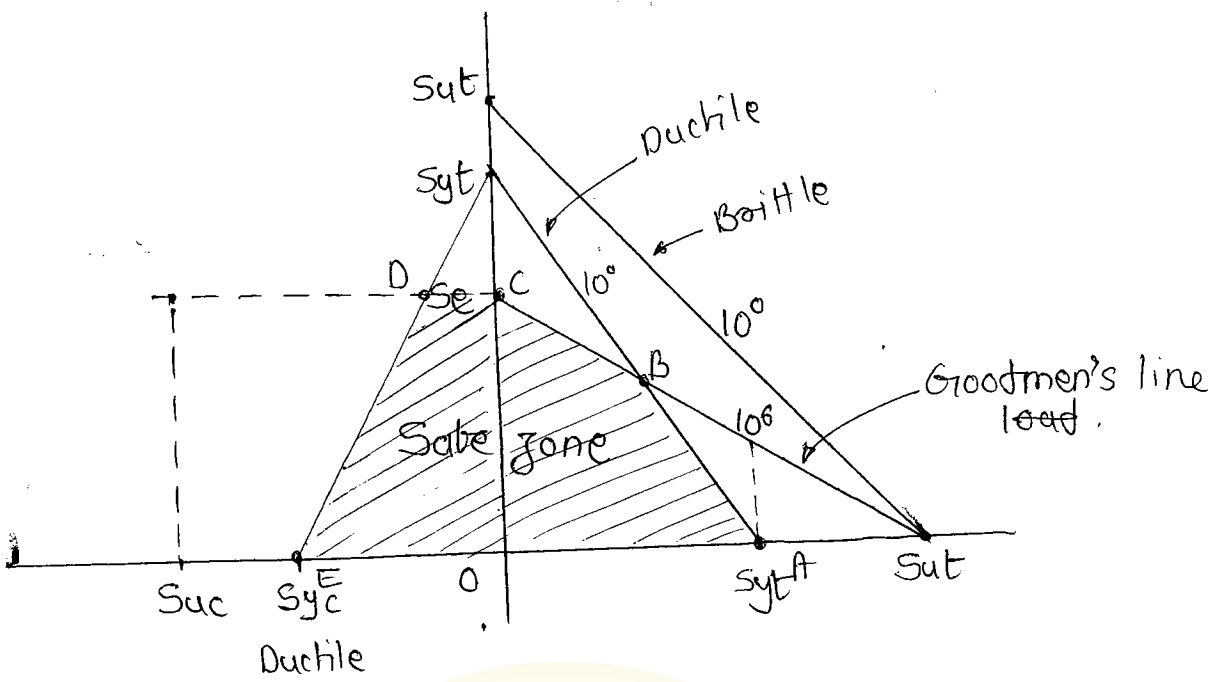

Assuming material will fail at syt line here give name 10°

Design for finite life.

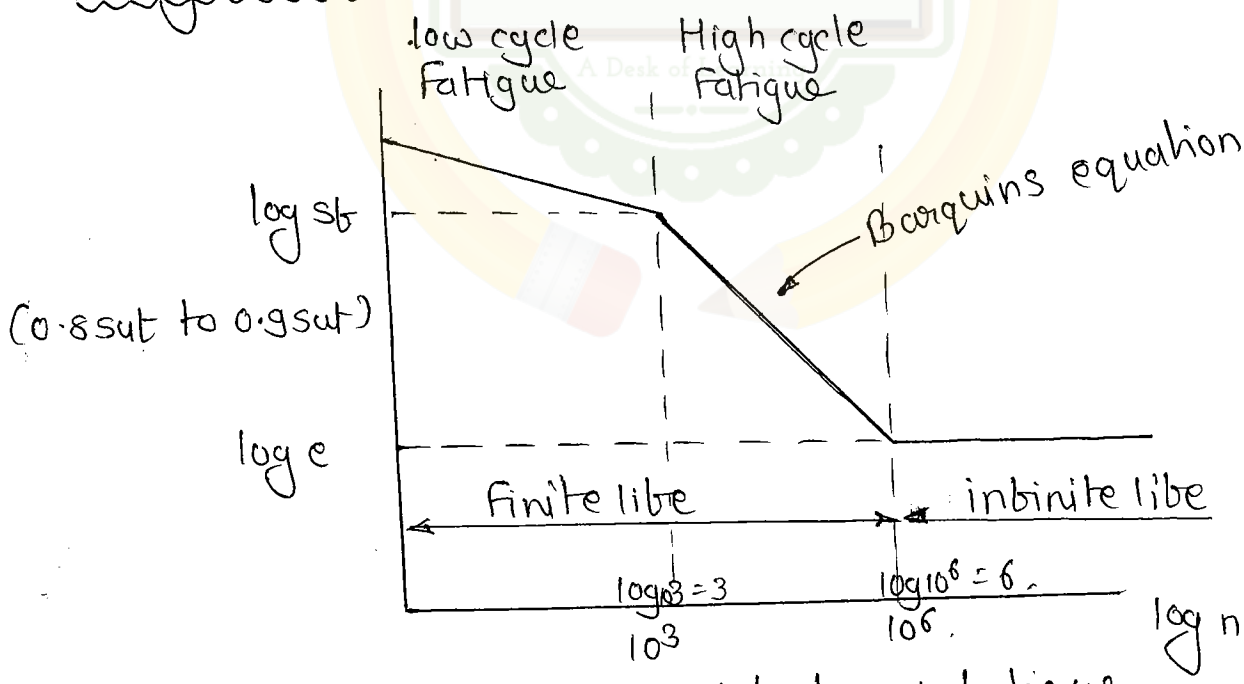

Design for finite life and high cycle fatigue

St corresponding to 10^3 rev is 0.8 sut to 0.9 sut.

NewtonDesk.com

Basquin's Equations.

$$A = S_f L^B.$$

A and B are constants.
S_f - fatigue strength
L - Life in revolution.

$$A = S_e (10^6)^B \quad -(1)$$
$$A = S_f (10^3)^B \quad -(2).$$

Find the value of A & B then, using above (1) & (2) eqn.

Cumulative fatigue.

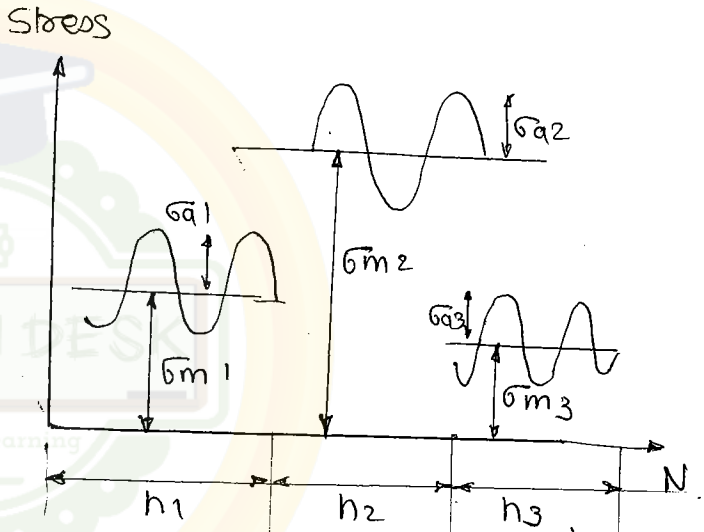

Ex:- Pulley, Bearings

Cumulative fatigue - Miner's equation

Let, a component is subjected to

Stress	σ_1	for	n_1	no of cycle.
	σ_2	"	n_2	"
	σ_3	"	n_3	"
	σ_4	"	n_4	"

If the component is subjected to only stress σ_1 then, lets its life = L_1 revolution

Life completed in one revolution $= \frac{1}{L_1}$ ← total life

NewtonDesk.com

Life completed during n_1 revolution $= \frac{n_1}{L_1}$

Total life consumed $= \frac{n_1}{L_1} + \frac{n_2}{L_2} + \frac{n_3}{n_3} + \cdots + \frac{n_x}{L_x} = 1$.

Let, $n_1 = \alpha_1 L$

$n_2 = \alpha_2 L$

$L \rightarrow$ total life

$\alpha_1 \rightarrow$ Part of the total life at σ_1

$$\frac{\alpha_1}{L_1} + \frac{\alpha_2}{L_2} + \cdots + \frac{\alpha_x}{L_x} = \frac{1}{L}.$$

Q 19 A machine part is made of steel with $S_{ut} = 630$ MPa, $S_e = 0.22\, S_{ut}$, Fatigue strength for 10^3 cycles is $0.9\, S_{ut}$. The life of part is 25000 cycles. The load for 50% of time is $\pm$ 225 Mpa and 30% of time is $\pm$ 145 MPa.

The lives of part at 225 MPa and 145 MPa respectively are (in revolution)

a] 9.29×10^4, 8.01×10^5

b] 9.7×10^4, 6×10^5

c] 8×10^4, 4×10^5

d] 3×10^5, 5×10^5.

Ans $S_{ut} = 630$ Mpa $\quad L = 25000$

$S_e = 0.22\, S_{ut}$ $\quad S_f = 10^3$ cycles is $0.9\, S_{ut}$

$$A = S_f L^B.$$

$S_{f_1} = \pm 225$ MPa $\quad \alpha_1 = 0.5$

$S_{f_2} = \pm 145$ MPa. $\quad \alpha_2 = 0.3$.

$S_e = 0.22 \times 630 = 138.6 \cdots\cdots 10^6$ rev

$S_f = 0.9 \times 630 = 567 \cdots\cdots 10^3$ rev.

$$A = 138.6 \times 10^{6\,B}$$

$$A = 567 \times 10^{3\,B}.$$

$$138.6 \times 10^{6\,B} = 567 \times 10^{3\,B} \quad 10^{6B-3B} = \frac{5.63 \times 10^3}{138.6 \times 10^6}.$$

$$B = 0.203$$

$$A = 2304$$

NewtonDesk.com

$$230H = S_b L^{0.203}$$

$$230H = 225\, L_1^{0.203}$$

$$L_1 = 9.32 \times 10^4$$

$$L_2 = 8.03 \times 10^5.$$

The load during the remaining time.

a] 250 MPa b] 375 MPa c] 395 MPa d] 415 MPa.

$$\frac{\alpha_1}{L_1} + \frac{\alpha_2}{L_2} + \frac{\alpha_3}{L_3} = \frac{1}{L}.$$

$$\frac{0.5}{9.32 \times 10^4} + \frac{0.3}{8.03 \times 10^5} + \frac{0.2}{L_3} = \frac{1}{25500}$$

$L_3 =$ ~~8756.15~~ 5837.46 cycle.

$$230H = S_b L^{0.203}$$

$$230H = S_b \times 5837.46^{0.203}$$

$$\boxed{S_b = 396 \text{ MPa}}.$$

29] The life of a machine component under heavy test load was 10 hrs. The life under combine loading was 18 hours of which 9.8 hr at heavy load and 8.2 hours was at the normal load. What is the expected life under normal operating load

a] 54.5 hr b] 6 hrs c] 410 hr d] 490 hr.

$$\frac{n_1}{L_1} + \frac{n_2}{L_2} = 1.$$

$$\frac{9.8}{10} + \frac{8.2}{L_2} = 1$$

$$\boxed{L_2 = 410}$$

OR//

$$\alpha_1 = 9.8/18, \quad \alpha_2 = 8.2/18$$

$$\frac{\alpha_1}{L_1} + \frac{\alpha_2}{L_2} = 1/L \qquad \frac{0.511}{10} + \frac{0.455}{L_2} = \frac{1}{18}$$

NewtonDesk.com

Welding

Welding is a process of joining metals by the application of heat with and without the application of pressure.

Advantages

1] Highest Joint efficiency
2] Lighter in weight
3] Easy to weld any part of the structure at any point.
4] Easy to make alteration

Disadvantages

1] Due to non uniform heating and cooling thermal stresses will be inducesed it result in destruction of component.

Joints → Butt
Joints → Fillet

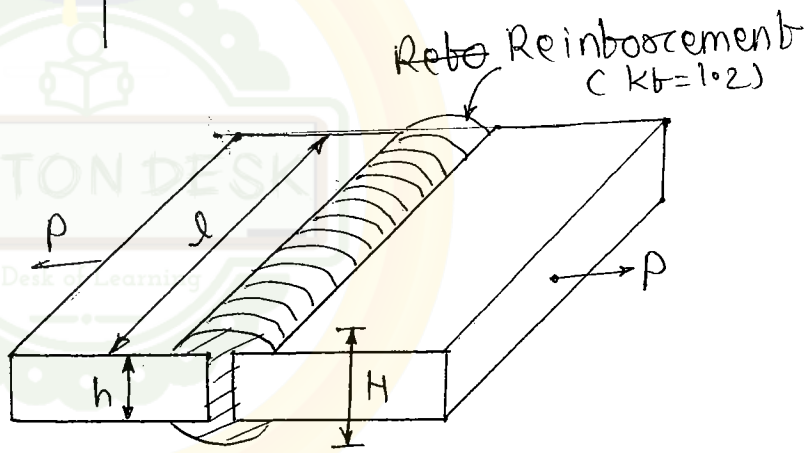

$$\sigma_t = \frac{P}{h \times l}$$

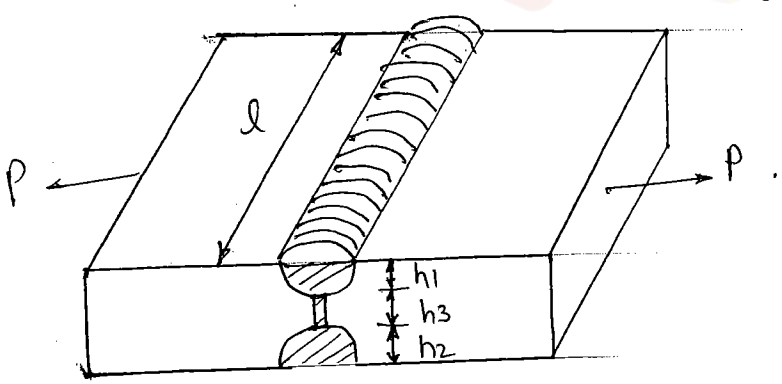

$$\sigma_t = \frac{P}{(h_1 + h_2)\, l}$$

NewtonDesk.com

Fillet weld.

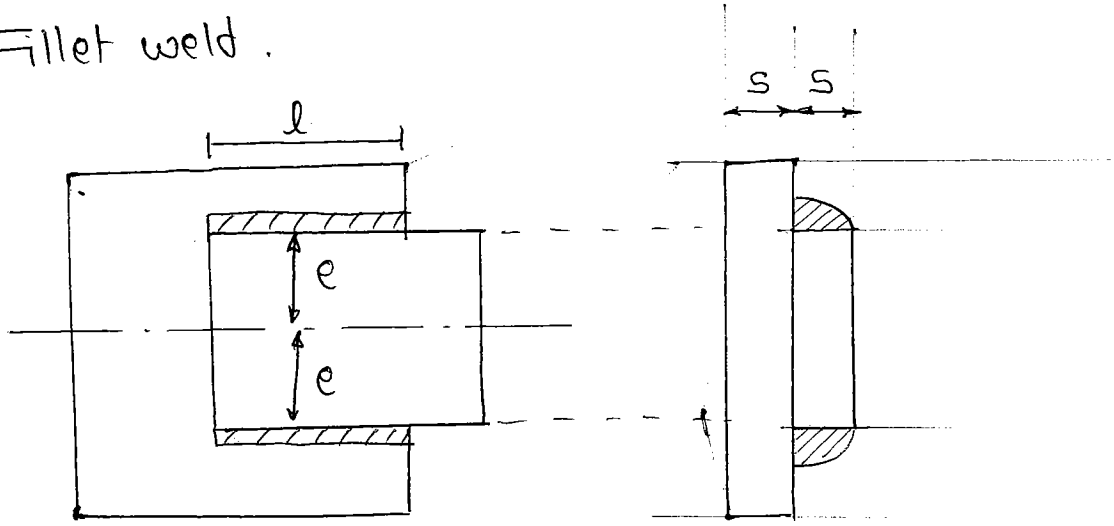

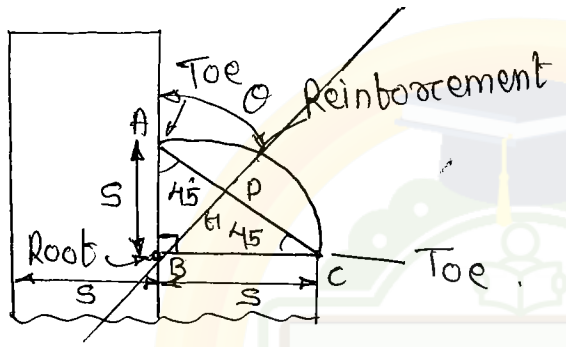

Toe and Root are the weakest point because of high stress concentration

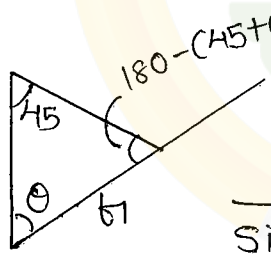

$$\frac{t_1}{\sin 45} = \frac{S}{\sin(180-(45+\theta))}$$

$$t_1 = \frac{S \sin 45}{\sin(45+\theta)}$$

$$= \frac{S \cancel{\sin 45}}{\cancel{\sin 45}\cos\theta + \cancel{\cos 45}\sin\theta}$$

$$= \frac{S}{\cos\theta + \sin\theta}$$

$$t_1 = \frac{S}{\sin\theta + \cos\theta}$$

NewtonDesk.com

Shear stress on the plane at an angle θ

$$\tau_\theta = \frac{P}{t \times l}$$

$$\tau_\theta = \frac{P(\sin\theta + \cos\theta)}{S \times l}$$

Max^m shear stress

$$\frac{\partial \tau}{\partial \theta} = 0$$

$$\frac{P}{Sl} \neq 0$$

$$\frac{\partial}{\partial \theta}(\sin\theta + \cos\theta) = 0$$

$$\cos\theta - \sin\theta = 0$$

$$\cos\theta = \sin\theta = 45^\circ$$

$$t = \frac{S}{\sin\theta + \cos\theta} \qquad \theta = 45$$

$$\boxed{t = 0.707S}$$ — throat thickness.

$$\tau_{45^\circ} = \tau_{max} = \frac{P(\sin 45 + \cos 45)}{Sl}$$

$$\tau_{max} = \frac{\sqrt{2}}{Sl} P$$

$$\boxed{P = \frac{1}{\sqrt{2}} Sl\, \tau_{max}}$$

Load carrying capacity of single parallel fillet weld

$$P = 0.707\, Sl \left(\frac{S_{sy}}{F.S}\right)$$ —

$$P = 1.414\, Sl \left(\frac{S_{sy}}{F.S}\right)$$ — Double fillet weld.

NewtonDesk.com

$$\tau_{90} = \frac{P}{Sl} \qquad \frac{\tau_{90}}{\tau_{45}} = 0.707$$

$$\tau_0 = \frac{P}{Sl}$$

Transverse billet weld.

$\tau_{max} = \tau_{67.5}$

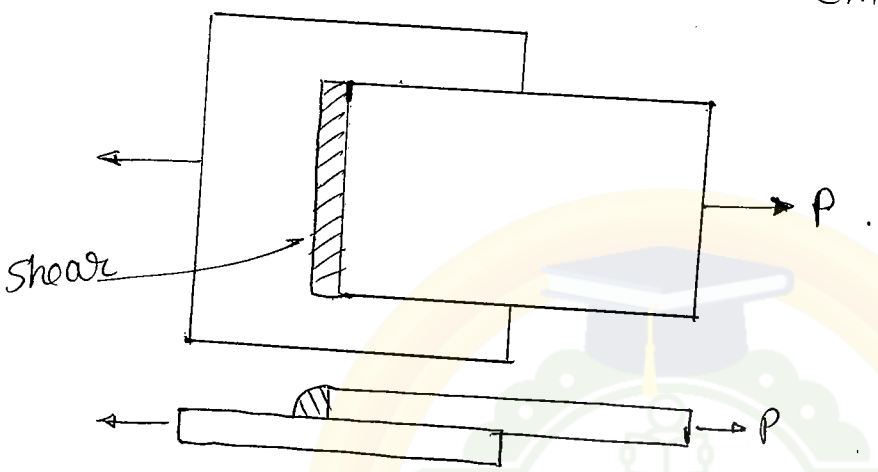

$\tau_{max} = \tau_{67.5}$

$P = 0.707\, Sl\, \tau_{max}$ — Transverse billet weld

$$\frac{\tau_{67.5}}{\tau_{45}} < 1.$$

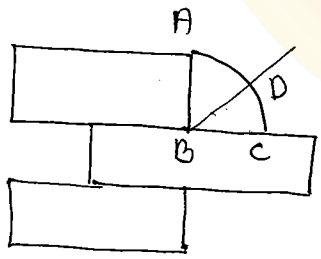

$$\tau = \frac{H}{t_1 l}$$

$$= \frac{P\sin\theta(\sin\theta + \cos\theta)}{Sl}.$$

H=

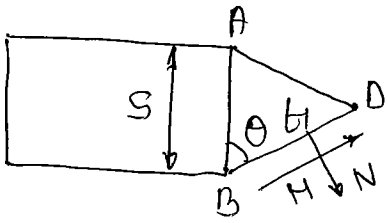

$$\frac{\partial \tau}{\partial \theta} = 0$$

$2\theta = 135°$.

$H = P\sin\theta$

$N = P\cos\theta$

NewtonDesk.com

Axially loaded unsymmetrical welds.

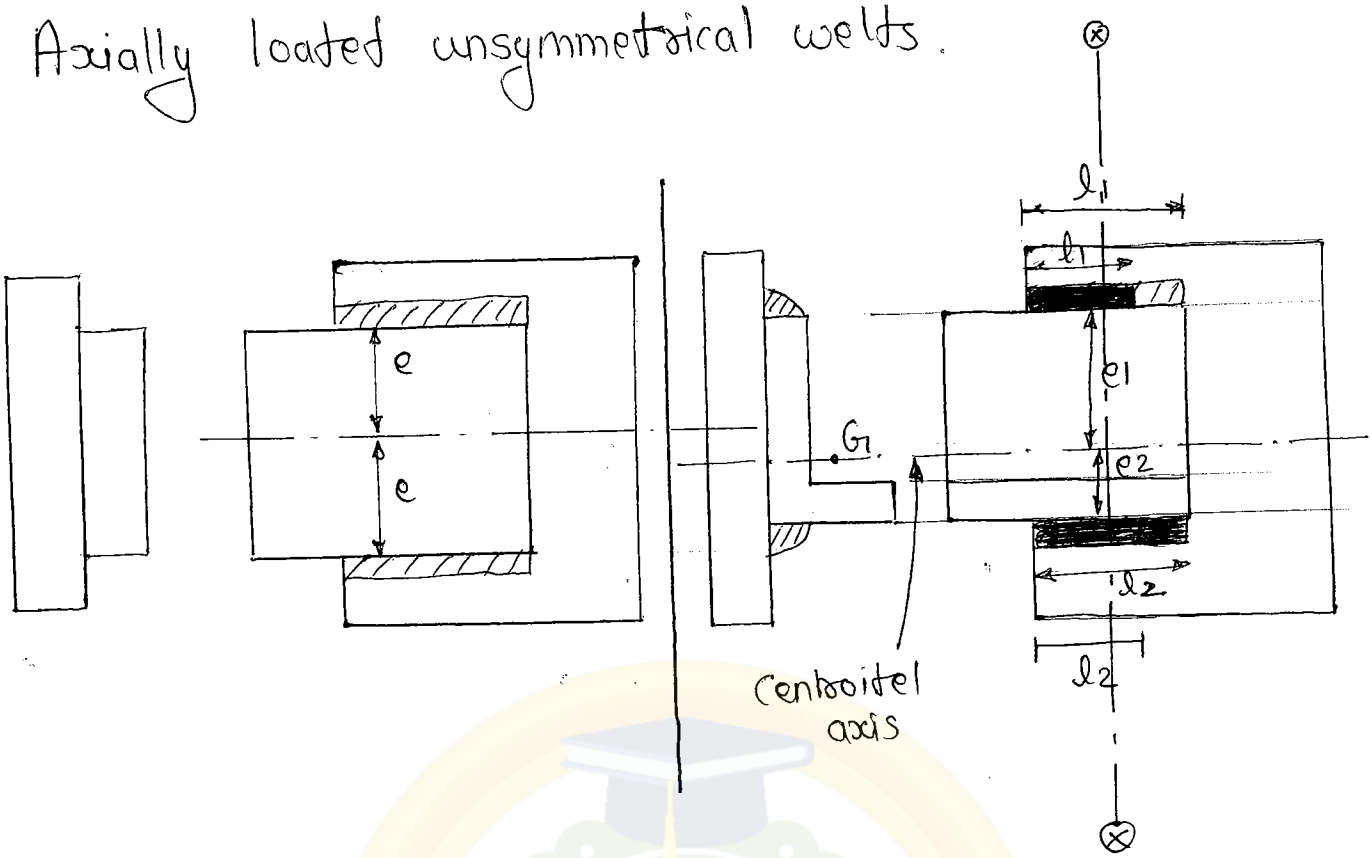

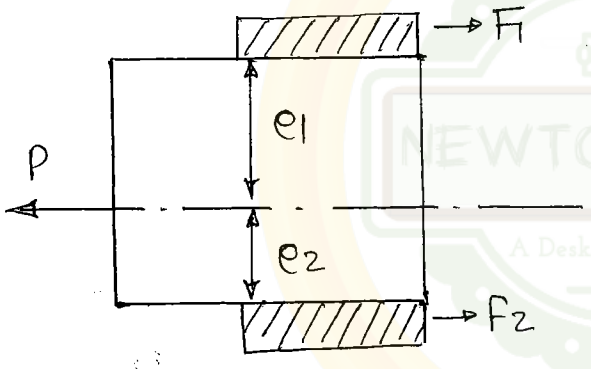

$$P = F_1 + F_2$$

$$\Sigma M_{\text{centroidal axis}} = 0.$$

$$F_1 \times e_1 - F_2 \times e_2 = 0.$$

$$F_1 e_1 = F_2 e_2$$

$$\frac{F_1}{e_2} = \frac{F_2}{e_2} = \frac{F_1 + F_2}{e_1 + e_2} = \frac{P}{e_1 + e_2}$$

$$F_1 = \frac{e_2}{e_1 + e_2} \times P.$$

$$F_2 = \frac{e_1}{e_1 + e_2} P_2$$

Ex:-

NewtonDesk.com

$$P = 0.707\, S l \left(\frac{S_{sy}}{F.S}\right)$$

$$l = l_1 + l_2$$

$$F_1 = 0.707\, S \times l_1 \left(\frac{S_{sy}}{F.S}\right)$$

$$F_2 = 0.707\, S \times l_2 \left(\frac{S_{sy}}{f_s}\right)$$

$$P = F_1 + F_2$$

$$l = l_1 + l_2$$

$$P \propto l$$

$$F_1 \propto l_1$$

$$F_2 \propto l_2$$

$$F_1 = \frac{e_2}{e_1 + e_2} P$$

$$l_1 = \frac{e_2}{e_1 + e_2} \times l$$

$$l_2 = \frac{e_1}{e_1 + e_2} \times l$$

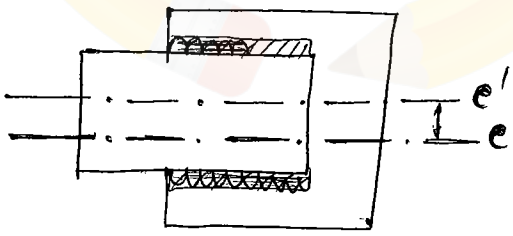

Bending movement will take place because of change in centroidle axis.

NewtonDesk.com

Eccentrically loaded Welded Joint.

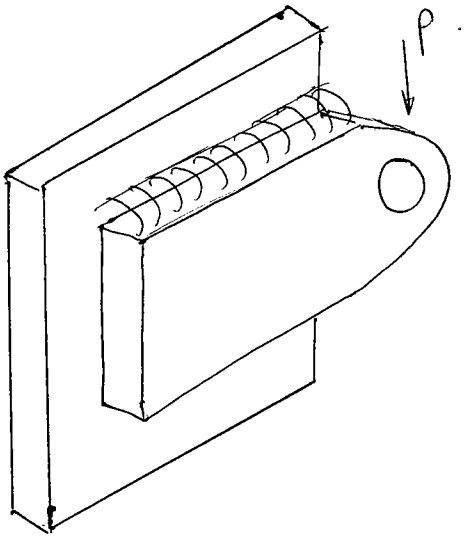

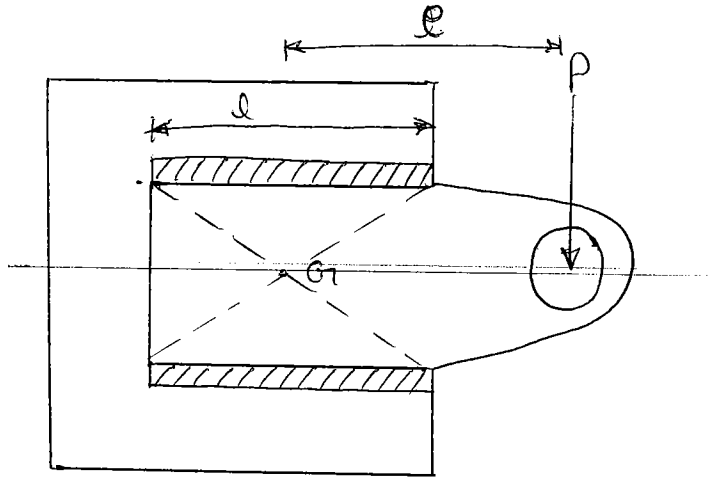

eccentric load cause a Movement Stress it may be bending or torsion according to the application of load

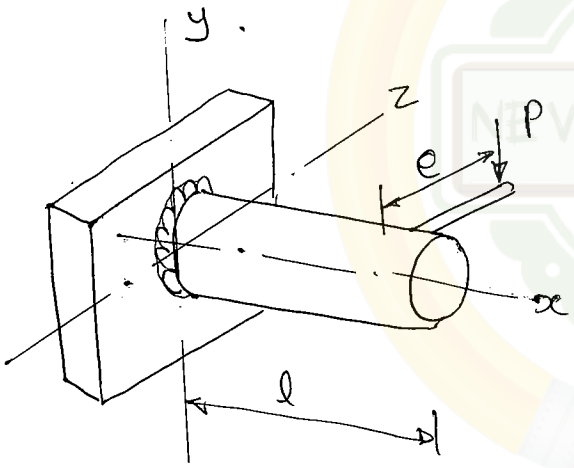

$M_x = P \times e = T$

$M_y = 0$

$M_z = P \times l$

$M_x \hat{i} + M_y \hat{j} + M_z \hat{k}$

$T + 0 + B$

Any member trying to move member about its own axis is called Torsion.

If $l = 0$. there is only torque.

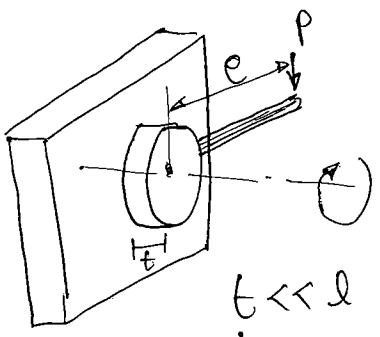

$t << l$

$t << e$

Hence it causes a torsional movement.

NewtonDesk.com

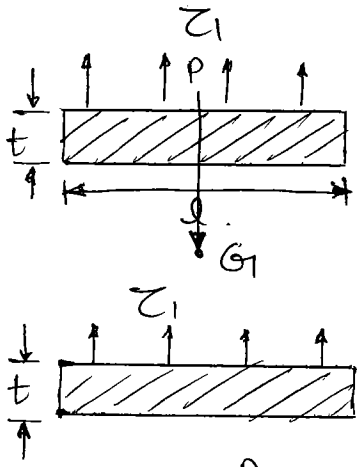

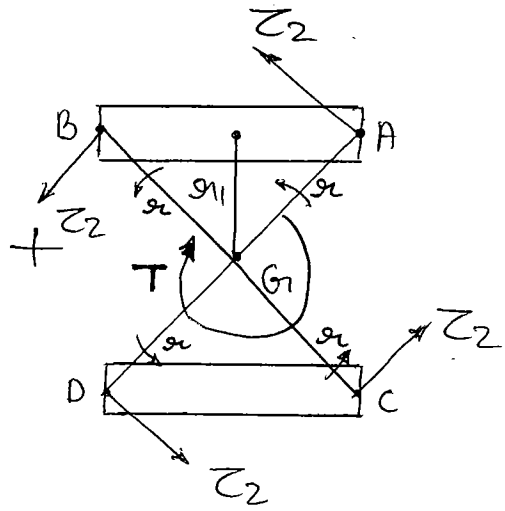

$$\frac{T}{J} = \frac{\tau}{r}$$

$$\tau = \frac{T}{J} \times r$$

$$\tau \propto r$$

$$\tau_1 = \frac{P}{2t \times l}$$

$$+ \quad \tau_2 = \frac{T}{J} \times r$$

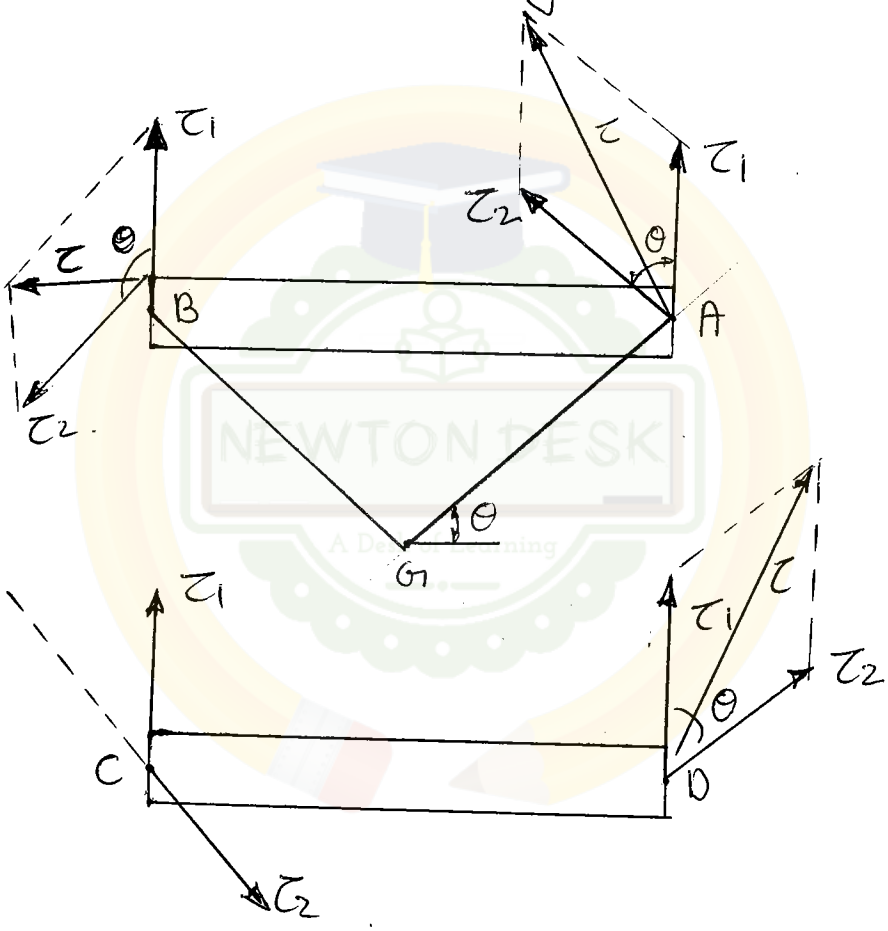

$$\tau = \sqrt{\tau_1^2 + \tau_2^2 + 2\tau_1\tau_2 \cos\theta}$$

$$\tau = \phi(\tau_1, \tau_2, \theta)$$

$$\theta\downarrow \quad \cos\theta\uparrow$$

Hence object will first fail from point A & D

NewtonDesk.com

Polar movement of Inertia.

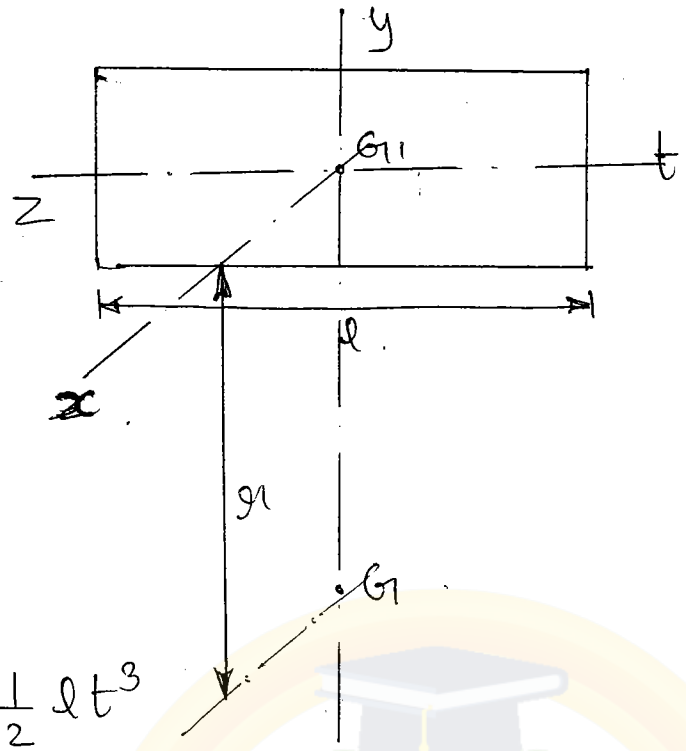

$$I_z = \frac{1}{12} l t^3$$

$$I_y = \frac{1}{12} t l^3$$

$$I_x = J_{G_1} = I_z + I_y$$

$$= \cancel{\frac{1}{12} l t^3} + \frac{1}{12} t l^3 \qquad t <<< l.$$

$$\boxed{I_{G_1} = \frac{1}{12} t l^3.}$$

$$I_G = I_{G_1} + A r^2$$

$$= \frac{1}{12} t l^3 + t \times l \cdot r^2.$$

$$\boxed{I_G = A\left[\frac{l^2}{12} + r^2\right]}$$

For bothsite

$$\boxed{I_G = 2A\left[\frac{l^2}{12} + r^2\right]}$$

Note:- If two thickness value is given then take the lowest value for weld design.

NewtonDesk.com

Pg no 44

1] The permissible shear stress in a fillet weld is 100 MPa. The fillet has equal leg length of 15 mm each. The allowable shear load on the weldment per mm is

a] 2.25 KN b] 1.15 KN c] 1.06 KN D] 0.15 KN

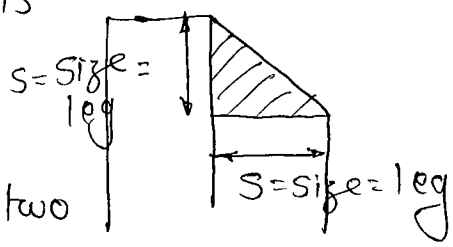

Size of weld = least thickness of two plates

$$P = 0.707 S l \left(\frac{S_{sy}}{F_S}\right)$$

$$= 0.707 \times 15 \times 1 \times 100$$

$$= 1.06 \text{ KN}.$$

2] The allowable load per linear centimeter of the fillet weld for the 10mm size, assume shear stress intensity to be 80 MPa is

a] 2.8 KN b] 5.6 KN c] 8 KN d] 11.3 KN.

$$P = 0.707 S l \left(\frac{S_{sy}}{F.S}\right)$$

$$= 0.707 \times 10 \times 10 \times 80$$

$$= 5.6 \text{ KN}.$$

NewtonDesk.com

Estimate the shear stress due to Torsion (T)

$$\tau = \frac{T}{J} \times r$$

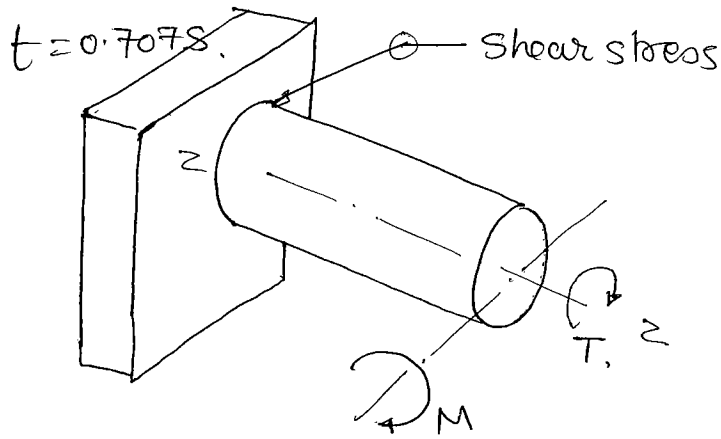

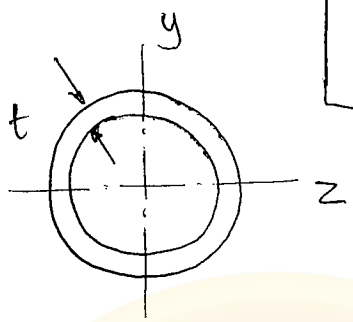

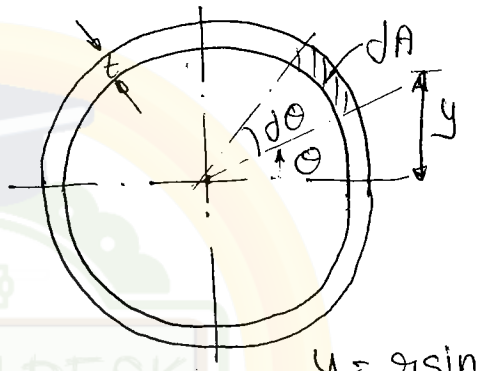

$$I_z = \pi t r^3$$

$$I_y = \pi t r^3.$$

$$I_x = \int_{\theta=0}^{\theta=2\pi} y^2 \, dA$$

$$y = r\sin\theta.$$

$$dA = r\,d\theta\, t.$$

$$= \int_{\theta=0}^{\theta=2\pi} r^2 \sin\theta \times r\,d\theta \times t$$

$$= r^3 t \int_{\theta=0}^{\theta=2\pi} \left(\frac{1-\cos 2\theta}{2}\right) dt$$

$$= \frac{r^3 t}{2} \int 1$$

$$= r^3 t \pi$$

$$= \pi t r^3$$

$$I_y = \pi t r^3$$

$$J = I_x = I_z + I_y = 2\pi t r^3$$

$$\tau = \frac{T}{J} \times r$$

$$= \frac{T}{2\pi t r^{\cancel{3}} \times \cancel{r}} = \frac{T}{2\pi t r^2}$$

$$\boxed{\tau = \frac{T}{2\pi t r^2}}$$

NewtonDesk.com

Bending stress (σ_b) due to B.M

$$\frac{M}{I} = \frac{\sigma_b}{y}$$

$$\sigma_b = \frac{M}{I} \times y$$

$$= \frac{M}{\pi t r^3} \times r$$

$$\boxed{\sigma_b = \frac{M}{\pi t r^2}}$$

Ratio betn the Bending and Shear stress due to M & T.

$$\frac{\sigma_b}{\tau} = \frac{M/\pi t r^2}{T/2\pi t r^2}$$

$$\frac{\sigma_b}{\tau} = \frac{M}{T/2}$$

$$\boxed{\frac{\sigma_b}{\tau} = \frac{2M}{T}}$$

Q:- The moment on the circular billet weld whose axis coinside with x axis is given by.

$M = \overset{M_x}{40\hat{j}} + \overset{M_z}{20\hat{k}}$ The ratio of bending & Shear stress is

a] 2 b] 4 c] 3 d] 1

$$\frac{\sigma_b}{\tau} = \frac{2 \times 20}{40} = 1 \qquad \frac{\sigma_b}{\tau} = \frac{2M}{T}$$

NewtonDesk.com

Q The torque T, that can be applied, if the permissible shear stress is 140 MPa, is

a] 2332.5 N-m b] 1452.3 N-m c] 1252 N-m

d] None.

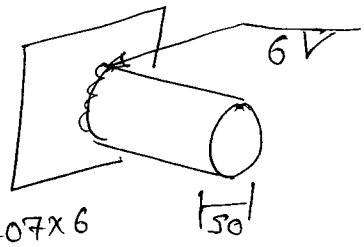

$$\tau = \frac{T}{2\pi t r^2}$$

$$T = \tau\, 2\pi t r^2$$

$$= 140 \times 2\pi \times \overset{0.707\times 6}{t} \times 25^2$$

$$= 2332.5 \text{ N-m}$$

Q25 - The fillet weld ~~weld~~ of length 100mm each are used to support flat 'b' on the bracket 'a' Flat 'b' carries only tensile load. The leg length of both fillet weld is 5mm. The properties of weld metal are $S_{ut} = 480$ MPa, $S_{yt} = 410$ MPa, $S_{sy} = 230$ MPa and reduction in area 40%. Find the load P.

a] 230 KN b] 162.6 KN c] 480 KN d] 80.8 KN

$$t = 0.707S = 0.707 \times 5$$

$$\times P = 2 \times l \times t \times S_{yt} \times 1.4. \quad P = 0.707 \times S \times l \left(\frac{S_y}{f.s}\right) \times 2$$

$$= 0.707 \times 5 \times 100 (230) \times 2$$

$$= 162.61 \times 10^3$$

$$= 162.61 \text{ MPa}.$$

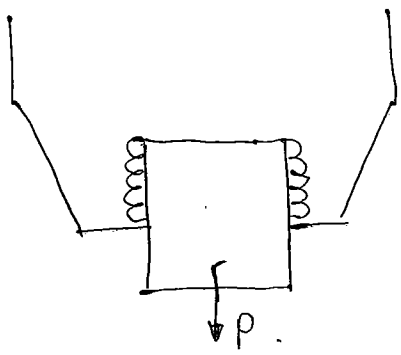

NewtonDesk.com

Q. A fillet weld joint is subjected to transverse loading 'F' as shown in fig. Both legs of the fillets are of 10 mm size and the weld depth is 30mm. If the allowable shear stress of the weld metal is 94 mpa. Considering the minimum throat area of the weld, the maximum allowable transverse load in kN is

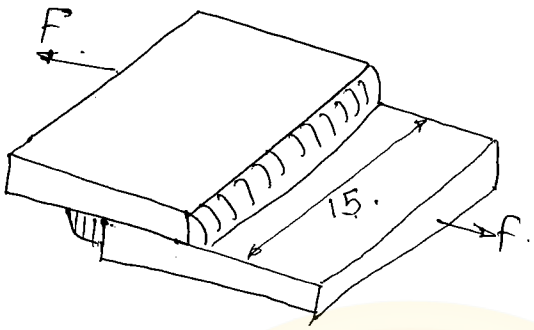

A] 14.44
b] 17.92
c] 19.93
d] 22.16

$P = l \times 0.707 \times S \times \tau$.

$= 0.707 \times 10 \times 30 \times 94$

$P = 19.93 \times 10^3$ N.

$= 19.93$ KN.

Q) 26 & 27 An angle plate is welded as shown in fig. The allowable stress for weld is 75 N/mm^2

26.] The length of weld at top in mm is

a] 103.7 (b) 96.3 (c) 90 (d) 110

27] The force carried by top weld is

a] 55KN (b) 60KN (c) 65KN (d) 50KN

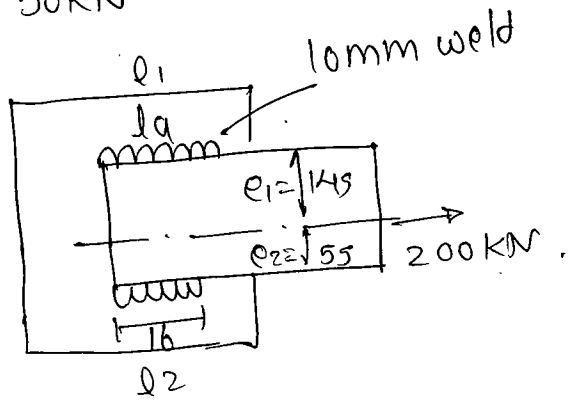

$l_1 = \frac{e_2}{e_1+e_2} l$.

$l_1 = \frac{55}{155+45} (l_1+l_2)$

$l_1 = \frac{11}{40} l$.

$l_2 = \frac{145}{200} (l)$

$l_2 = \frac{29}{40} l$.

$F_1 = \frac{e_2}{e_1+e_2} P$.

$= \frac{55}{200} \times 200$

$= 55$ KN.

$F_1 = 0.707 S l_1 \left(\frac{S_y}{FS}\right)$

$55 = 0.707 \times 10 l_1 (75)$

$= 0.103$ m

$l_1 = 103.72$

NewtonDesk.com

48]

Q 30. In the welded joint shown in fig. If the weld B has thicker fillets than at A then the load carrying capacity P of the joint will be.

a] Increases

b] Decreases.

c] unaffected

d] exactly got ~~doub~~ double

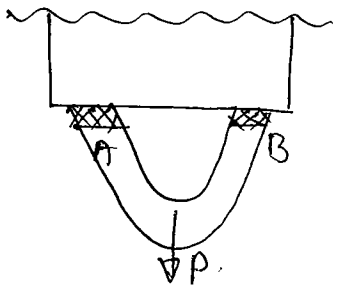

Pg53

Q 10] Compound fillet welding joint is loaded by P as shown. The maximum shearing ~~as~~ stress accure at a point

a] A and B

b] B & D

c] Only A

d] Only C

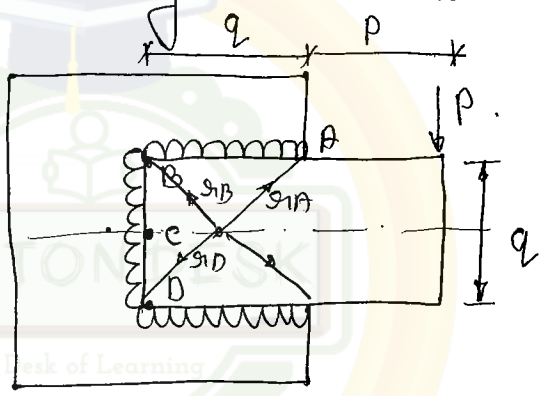

(12) A spherical pressure vessel made of 10mm steel plate hemispheres butt welded together and the tank is to be 15m diameter. The tensile strength of weld metal is 85 MPa. The allowable internal pressure inside the tank is

a] 0.227 MPa

b] 0.452 MPa

c] 0.161 MPa

d] 0.752 MPa.

$$\sigma_h = \frac{PD}{4t}$$

$$85 = \frac{P \times 15 \times 10^3}{4 \times 10}$$

$$\boxed{P = 0.226 \text{ MPa}}$$

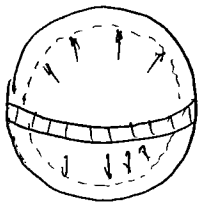

NewtonDesk.com

Screwed Fasteners.

Designation

Md x P

Metric

Nominal dia

Pitch

NewtonDesk.com

Screw Forms

① BSW

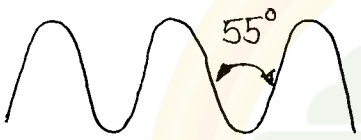

② BA

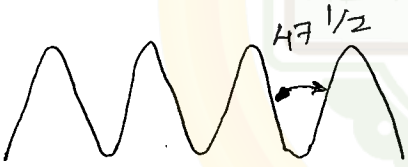

③. ANS

④ Isometric.

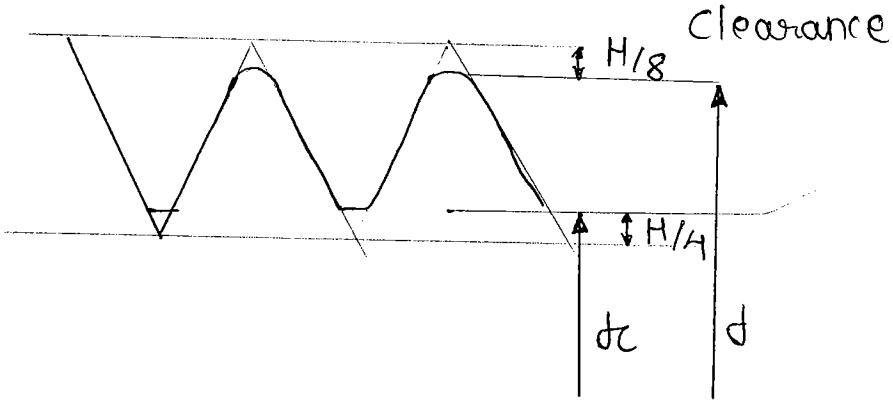

NewtonDesk.com

⑤ Square thread angle = 0°

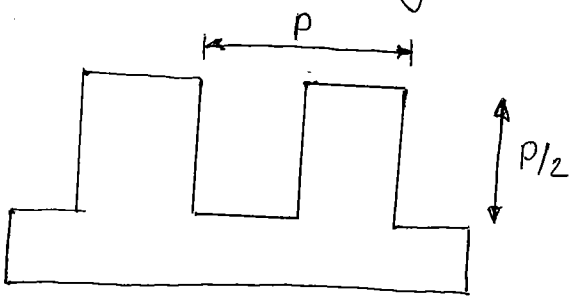

⑥.

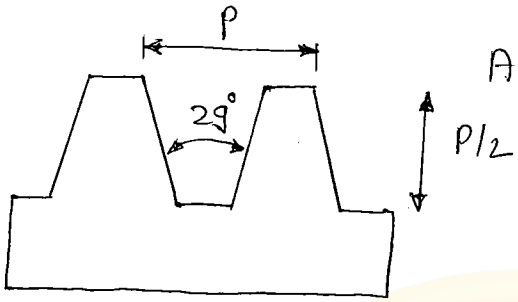

ACME Thread.

⑦

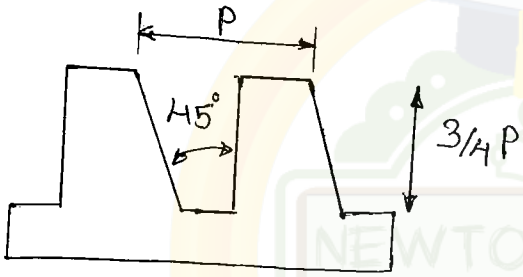

Bolted Joint

Power Transmission.

NewtonDesk.com

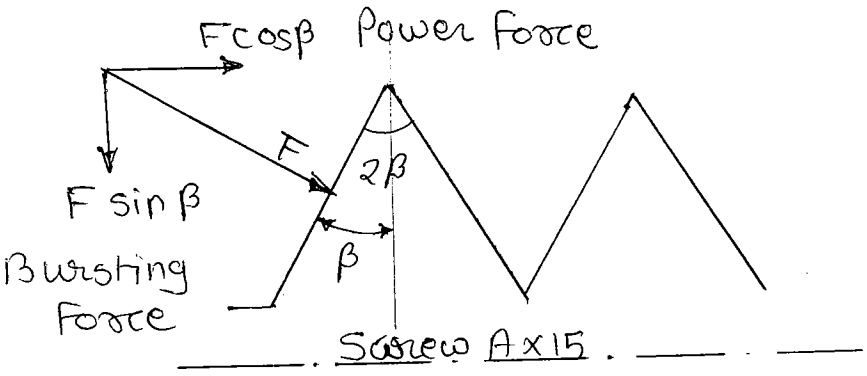

Locking force/Bursting Force
$= F \sin\beta$

$\beta \uparrow$ $F \sin\beta \downarrow\uparrow$

Power Force
$= F \cos\beta$

$\beta \downarrow$ Power $\uparrow$

for Max power $\beta = 0$. (square thread)

Stresses in screw.

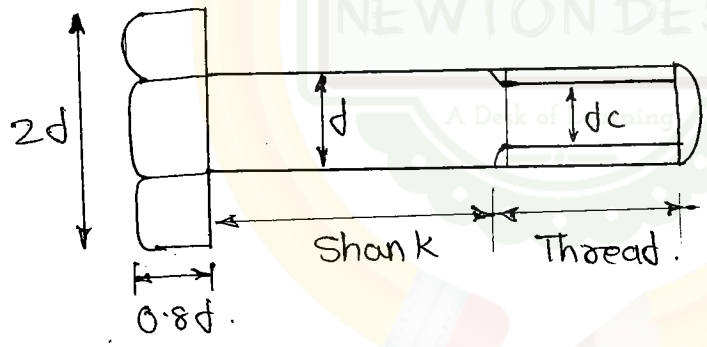

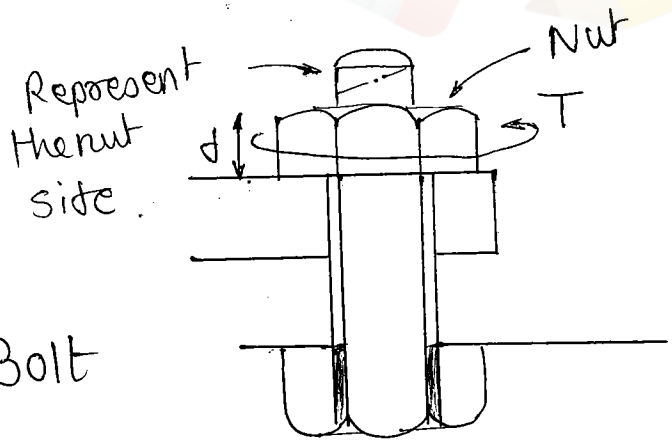

SCREW

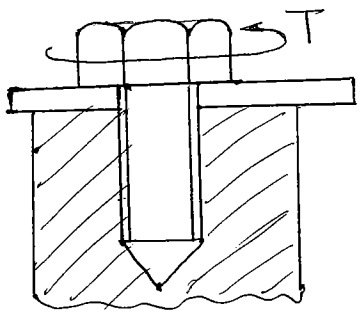

→ Bolt is alway having a nuts & torque given to nut

→ Screw is made for taped hole. It don't have nut and torque given to head

NewtonDesk.com

Stresses in screw

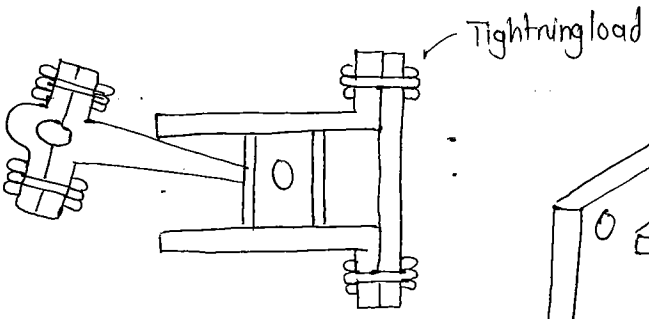

I.C Engine

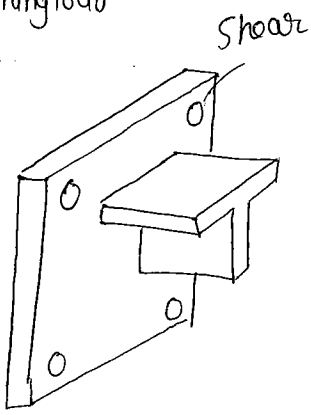

Wall Brackets.

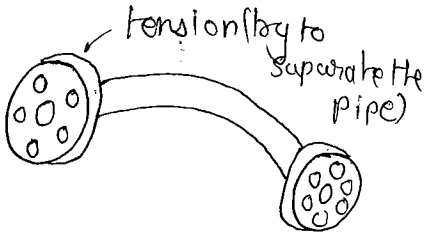

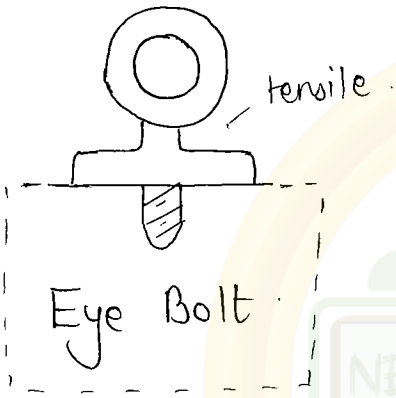

Eye Bolt

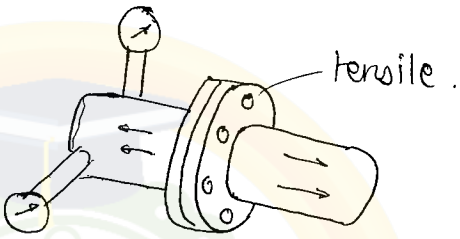

Power vessel

We are designing the ~~load~~ Bolt for tensile force.

① Preload (To tight the bolts)

② External force (load to which bolt is subjected)

Stresses in Screw

① Stresses due to preload / Initial tightining.

② Stresses due to external load

③ Stresses due to combine preload and external load.

NewtonDesk.com

Stresses due to pre load.

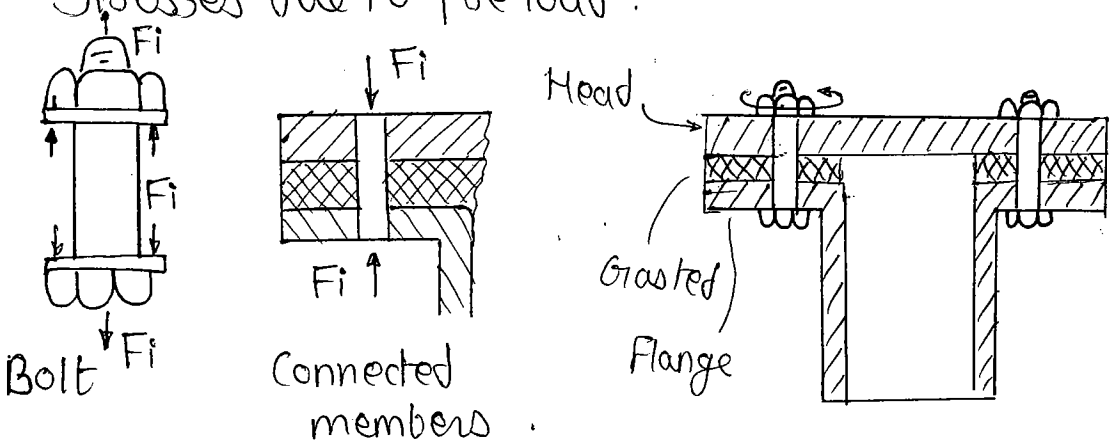

$F_i = 2840d$ N For leak proof joint based on the proof strength (without permanent deformation)

$F_i = 1420d$ N For ordinary joint

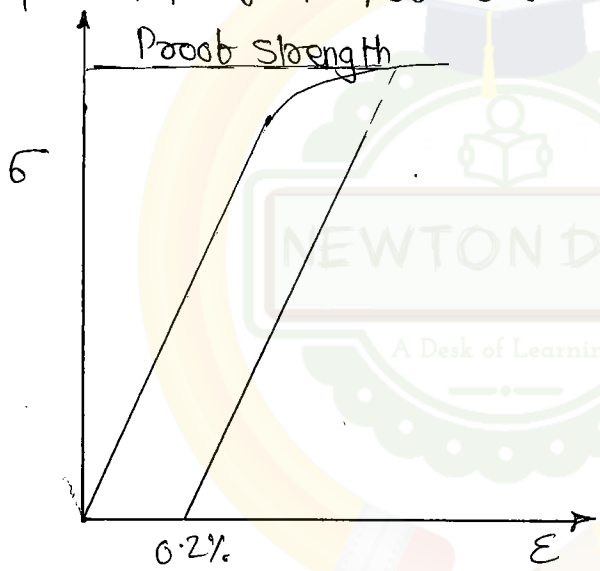

Initial load is expressed in term of dia of bolt or in term of load applied

$F_i = 2840d$ or $F_i = 1.5P$.

NewtonDesk.com

Stresses due to Preload

① Tensile stresses.

$$\sigma_t = \frac{F_i}{\frac{\pi}{4} d_c^2}.$$

②. Torsional shear stress

$$\tau = \frac{16T}{\pi d_c^3}.$$

③. Shear stress accross thread.

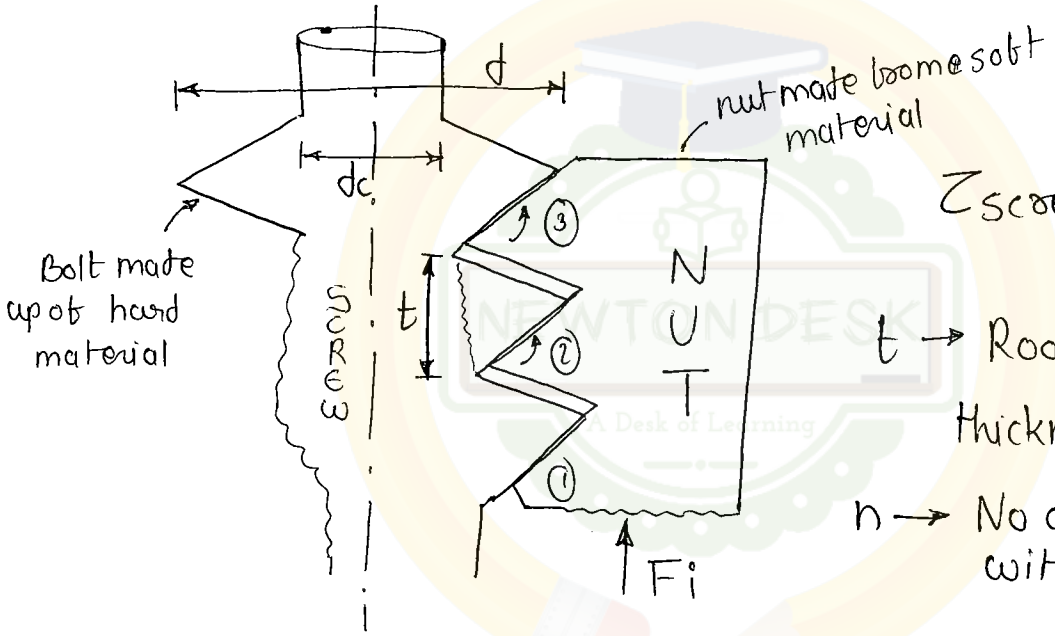

$$\tau_{screw} = \frac{F_i}{\pi d_c \times t \times n}$$

t → Root thickness or thickness of thread

n → No of thread in contact with nut.

$$\tau_{nut} = \frac{F_i}{\pi d t \times n}.$$

d → external dia

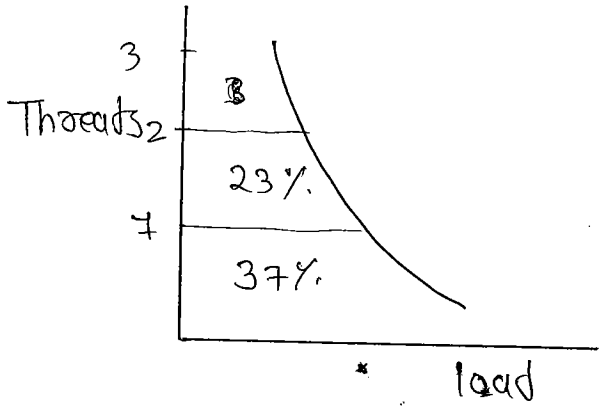

Increasing the size of nut will not give advantage because last thread take zero load

Bearing pressure – When two threads are in contact they transmits the load called as bearing pressure or crushing stress

NewtonDesk.com

(4) Crushing stress

$$\sigma_c = \frac{F}{\frac{\pi}{4}(d^2 - d_c^2)\,n}$$

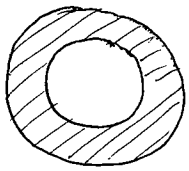

(5) Bending stress

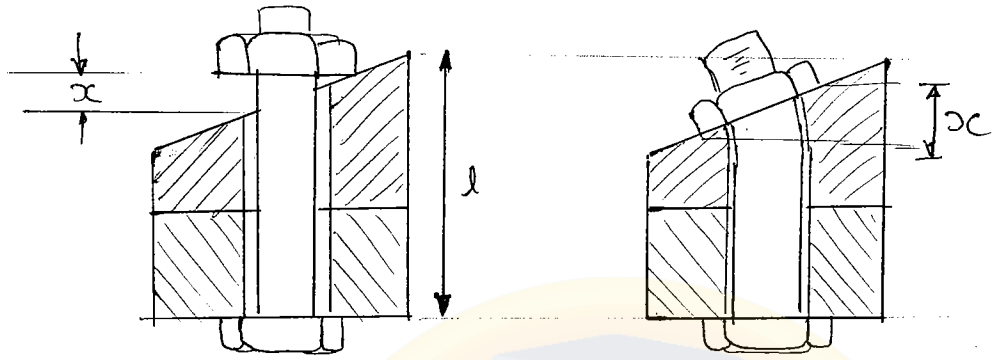

$$\sigma_b = \frac{x \times E}{2\,l}$$

x - distance betn the external corner of nut
l - holding length
E - Young's Modulus of elasticity.

Stresses due to external load.

(1) Tensile stress

$$\sigma_t = \frac{P}{\pi/4\, d_c^2}$$

P - External load.

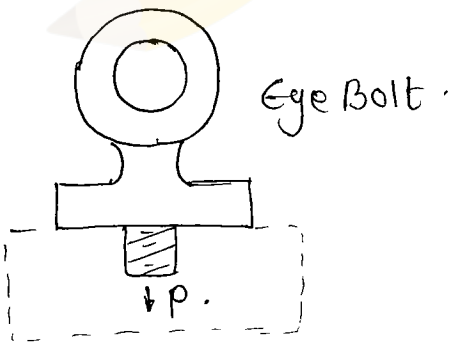

(2) Shear stress.

$$\tau = \frac{P}{\frac{\pi}{4} d^2}$$

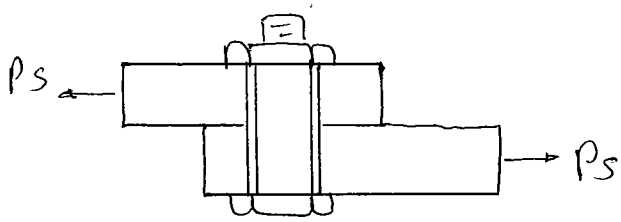

NewtonDesk.com

Note - Due to shear & tension combinely acting

$\sqrt{\left(\frac{\sigma_t}{2}\right)^2 + \tau^2}$

$\frac{1}{A}\sqrt{\left(\frac{P_t}{2}\right)^2 + P_s^2}$

① Guest's theory.

$$\tau_{max} = \left[\sqrt{\left(\frac{P_t}{2}\right)^2 + P_s^2}\right] \times \frac{1}{A}.$$

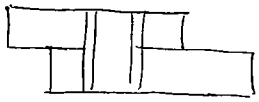

② Distortion energy theory.

$$\sigma_e = \sqrt{\sigma^2 + 3\tau^2}.$$

$$= \sqrt{\sigma_t^2 + 3\tau^2}.$$

Note:- Take σ_c in both shear and tension to avoide confusions.

Stresses due to combined external and preloads

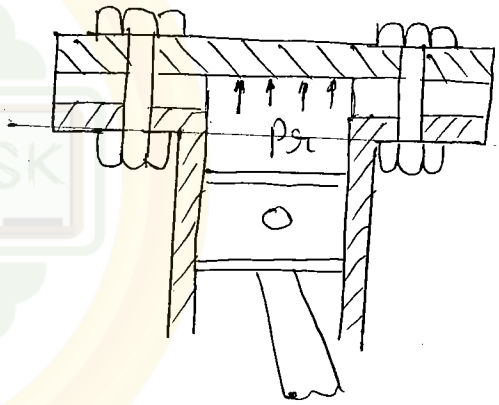

Let, p_r = Pressure

D = Bore dia.

External load $P = P_r \times \frac{\pi}{4} D^2 \cdot N$.

P = Total load.

$P = P_b + P_m$

$\boxed{F_i = 1.5P}$

P_b = External load showed by bolt

P_m = Portot external load taken by connected member.

F_b = Resultent load on bolt

$= P_b + F_i$

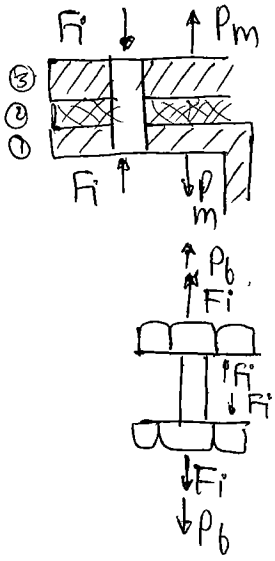

F_m = Resultant load on connected member

$= P_m - F_i$

Δ_b = Elongation of bolt due to F_i

Δ_m = Compression of connected member due to F_i

NewtonDesk.com

$$\delta_b = \frac{\text{External and Preload}}{\text{Increase in elongation of bolt due to } P_b}$$

δ_m = decrease in compression of conned members due to P_m

For compatability

$$\boxed{\delta_b = \delta_m}$$

K_b = Stiffness of bolt.

$$= \frac{P_b}{\delta_b}.$$

K_m = Combined stiffness of connected members (Series)

$$\frac{1}{K_m} = \frac{1}{K_1} + \frac{1}{K_2} + \frac{1}{K_3}.$$

$$K_m = \frac{P_m}{\delta_m}$$

$$\delta_b = \delta_m$$

$$\frac{P_b}{K_b} = \frac{P_m}{K_m}$$

$$P_m = \frac{K_m}{K_b} \times P_b.$$

$$\rightarrow P = P_b + P_m$$

$$P = P_b + \frac{K_m}{K_b} \times P_b.$$

$$P = P_b \left[\frac{K_b + K_m}{K_b}\right]$$

$$P_b = \left[\frac{K_b}{K_b + K_m}\right] P.$$

$$P_m = \left(\frac{K_m}{K_b + K_m}\right) P.$$

NewtonDesk.com

C = stiffness factor.

$= k_b / (k_b + k_m)$

$P_b = cP$.

$P_m = (1-c)P$.

$\boxed{F_b = P_b + F_i}$

$F_m = P_m - F_i$

$\boxed{F_m = (1-c)P - F_i}$

1] Size of bolt.

$F_b = \frac{\pi}{4} d_c^2 \times \frac{S_{yt}}{F.S}$.

2] Leakage is prevented.

$F_m \leq 0$. – Resultant load must be compression

$(1-c)P - F_i \leq 0$.

$\boxed{(1-c)P \leq F_i}$

Pno. 34

Q.] The ratio of load required to open the bolt joint to the initial tightening load with stiffness of mating part is equal to four times stiffness of bolt is

a] 0.2 b] 0.8 c] 1.25 d] 2.5.

$k_m = 4k_b$.

$\frac{P}{F_i}$

$(1-c)P - F_i = 0$.

$\frac{P}{F_i} = \frac{1}{1-c}$

$= \frac{1}{1-0.2}$

$= \frac{1}{0.8}$

$\frac{P}{F_i} = 1.25$

$c = k_b / k_b + k_m$

$= \frac{k_b}{5k_b} = \frac{1}{5} = 0.2$

NewtonDesk.com

③ A bolted joint connects two members with an axial tightnening for F kN. The bolt has matric threads of 4mm pitch The torque req. to achivie this force F is 1.4 kN-mm what is the value of 'F'.

a] 0.35 kN b] 0.7 kN c] 1.05 kN d] 2.2 kN.

$p = 4mm$.

$T = 1.4 kN-mm$

Work done

$W =$ Force x distance $=$ Torque $\times \theta$

$F \times 4 = 1.4 kN-mm \times 2\pi$

$F = 2.2 kN$.

NEWTON DESK
A Desk of Learning

Bolted Joints.

Advantage of Preload.

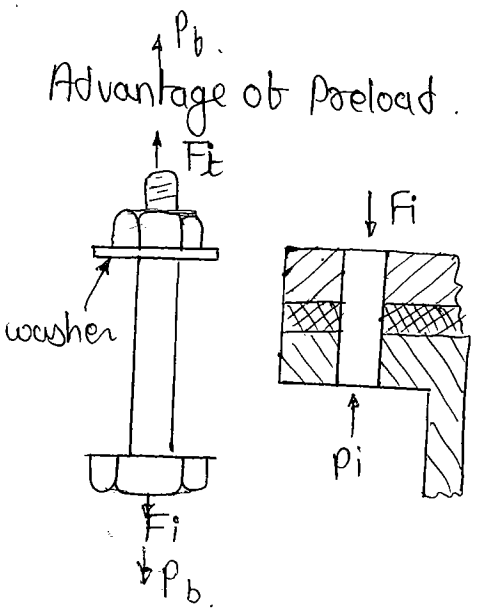

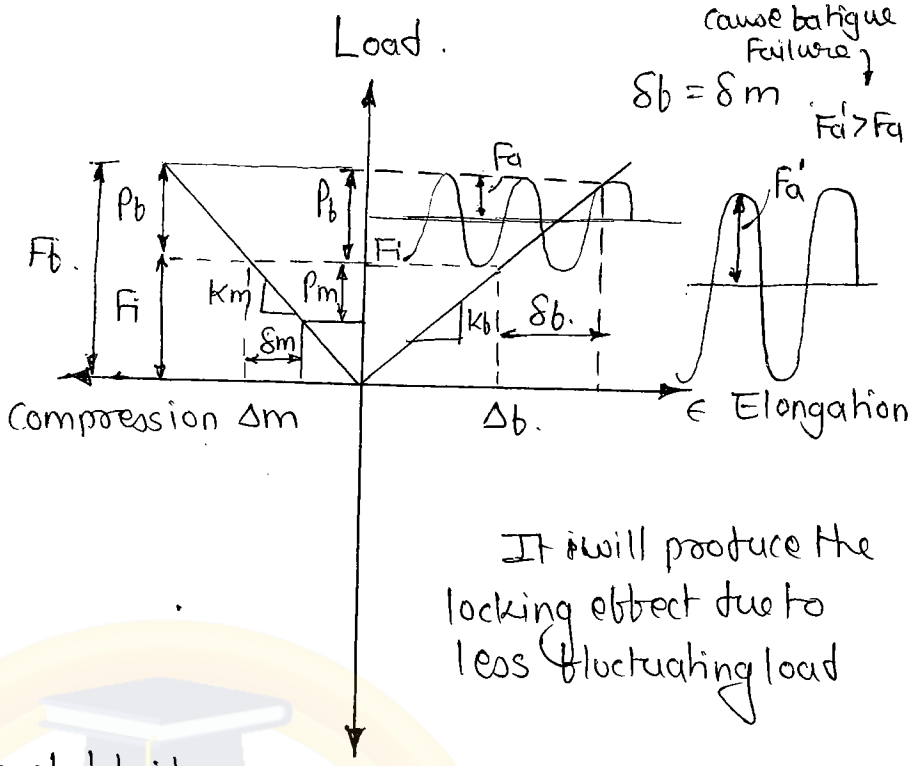

Hence it will cause fatigue failure

$\delta b = \delta m$

$Fa' > Fa$

It will produce the locking effect due to less fluctuating load

① To prevent leakage of fluid.

② Increases the fatigue strength of bolt

③ Increases the locking effect.

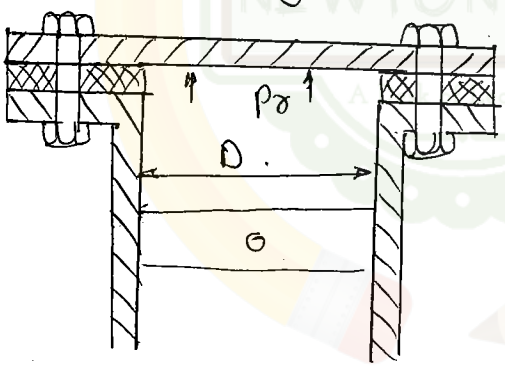

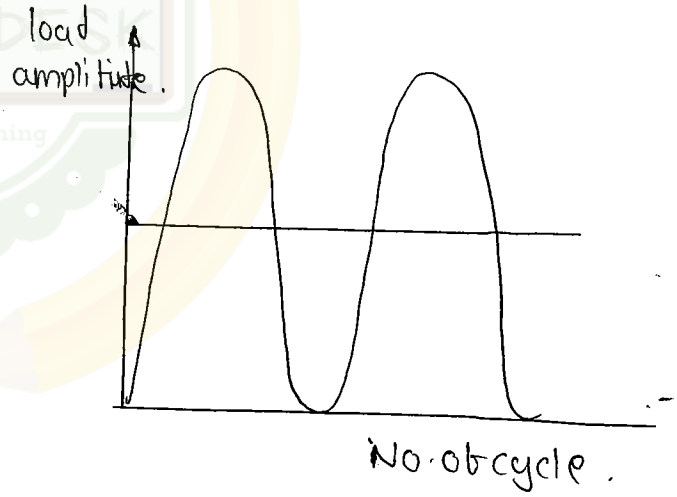

$P = PA \times \frac{\pi}{4} D^2$

On the bolt the P is varying from min to maximum value.

NewtonDesk.com

Eccentric load on bolt Joint

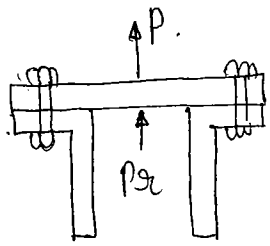

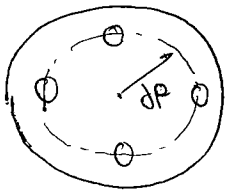

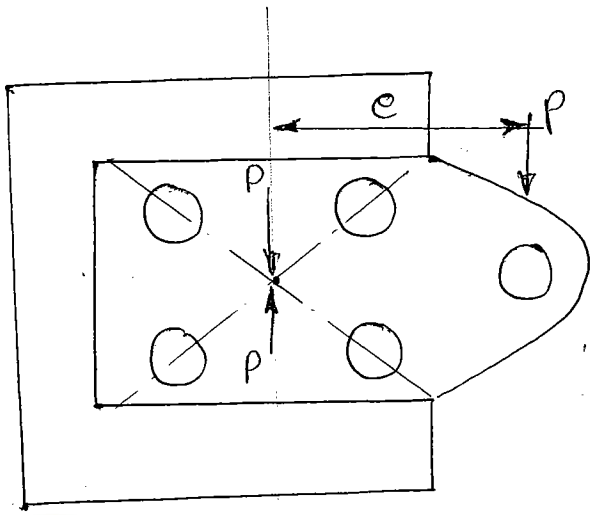

$$P = \frac{\pi}{4} d_c^2 \times n \times \frac{S_{yt}}{F_s}.$$

$$\tan\theta = \frac{a}{b}$$

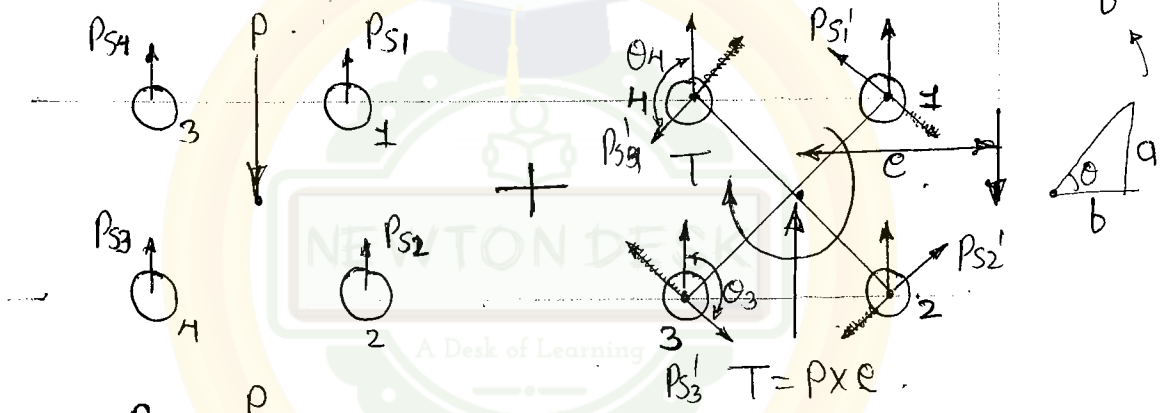

$$P_{s1} = \frac{P}{4}.$$

$$P_{s1} = P_{s2} = P_{s3} = P_{s4} = \frac{P}{4}.$$

Primary shear load

OR

Direct shear load.

$$T = P \times e.$$

$$\frac{T}{J} = \frac{\tau_2}{r}.$$

$$\tau_2 \propto r$$

Secondary shear load.

Resultant shear loads on the bolt

$$P_s = \sqrt{P_{s_1}^2 + P_{s_1}'^2 + 2 P_s P_{s_1}' \cos\theta}$$

$$P_s = \phi\,(P_s, P_s', \theta)$$

$$\theta \downarrow \quad \cos\theta \uparrow \quad P_s \uparrow$$

$$\boxed{(\theta_1 = \theta_2) < (\theta_3 = \theta_4)}$$

NewtonDesk.com

Q1. 1) The weakest bolt — only one.

2) Total shear force on bolt (2) — $P/3$.

3) Least loaded bolt — 3

4) Primary shear load on bolt 3 — $P/3$

5] Secondary shear load on bolt ② — 0.

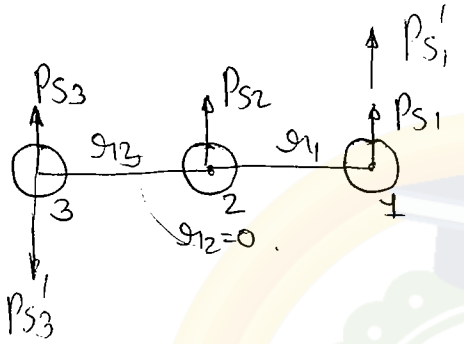

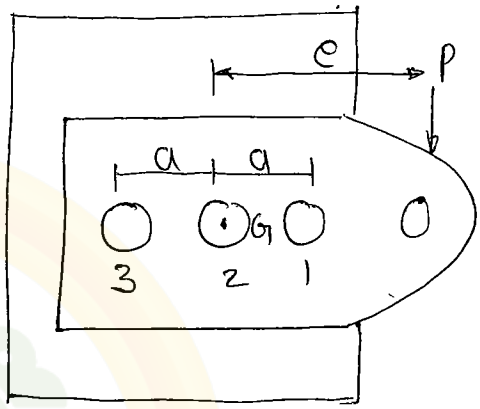

1]

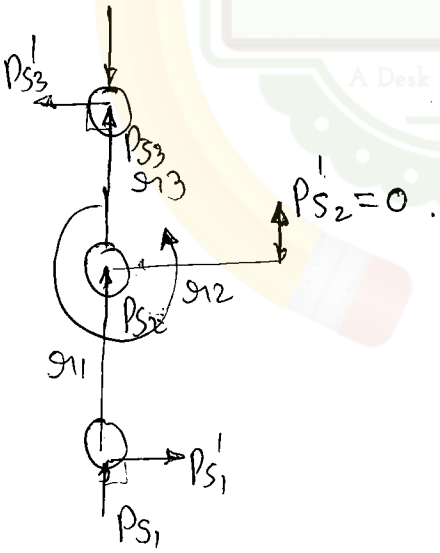

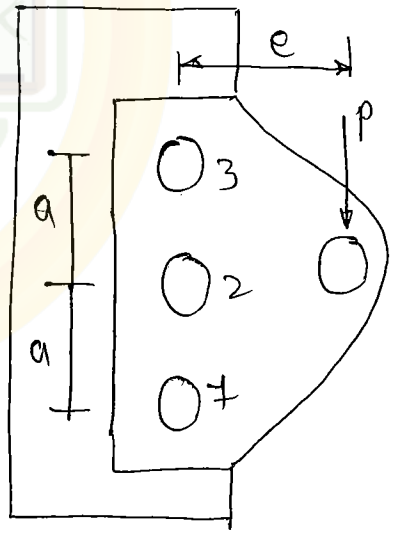

1] ~~r_1~~ 1 and 3

2] $P/3$.

3] 2.

4] $P/3$

5] 0.

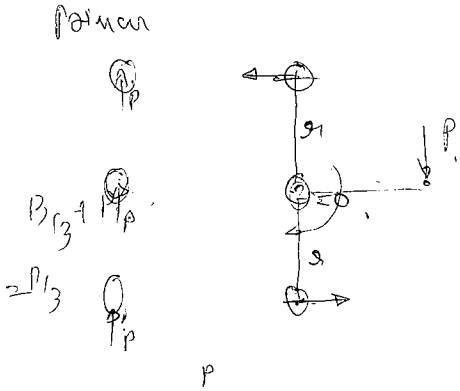

NewtonDesk.com

③ A bolt joint is shown in the fig. The maximum shear stress in MPa in bolts A and B respectively are.

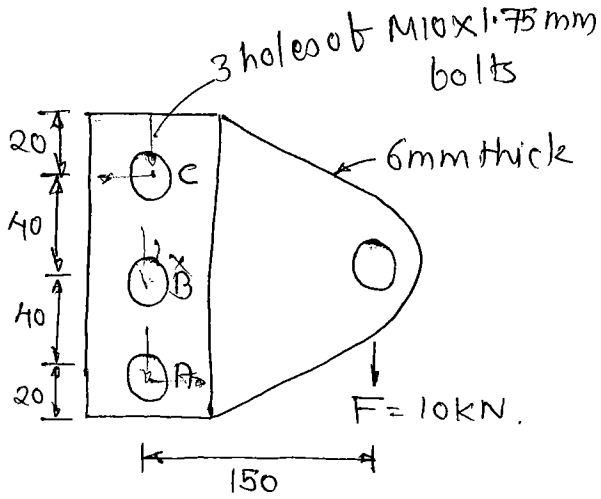

$$\tau_{total} = \frac{10}{\frac{\pi}{4}d^2} + \frac{16T}{\pi d^3}.$$

$$= \frac{10\times10^3}{3\times\frac{\pi}{4}\times10^2} + \frac{16\times10\times10^3\times150}{\pi\times10^3}.$$

$$= \cancel{127.32}\,63.66\,\text{kN} + 7639.43$$

$$\tau_2 = 3333.33\ \text{N/mm}^2.$$

$$\frac{T}{J} = \frac{f_s}{R}$$

$$T = \frac{\pi}{16} f_s d^3.$$

$$f_s = \frac{16T}{\pi d^3}.$$

$$= \sqrt{p^2+q^2+2pq\cos\theta}.$$

$$=$$

$$T = P_{s_A}' r_A + P_{s_B}' r_B + P_{s_C}' r_C$$

$$= k r_A \times r_A + k r_B \times r_B + k r_C \times r_C$$

$$P\times l = k(r_A^2 + r_B^2 + r_C^2)$$

$$k = \frac{P\times l}{r_A^2 + r_B^2 + r_C^2}$$

$$k = 0.468.$$

$$P_{s_A}' = 0.468\times40$$

$$= 18.75\,\text{kN}.$$

$$P_A = \frac{10}{3} = 3.33$$

$$P_B = \frac{10}{3} = 3.33$$

$$P_C = \frac{10}{3} = 3.33$$

$$P = \sqrt{(P_{s_A})^2 + (P_{s_A}')^2}$$

$$= \sqrt{(3.33)^2 + (18.75)^2}$$

$$P = 19.04\,\text{kN}.$$

$$\tau = \frac{19.04}{\frac{\pi}{4}\times10^2}$$

$$\tau = 0.242146\ \text{kN}$$

$$\boxed{\tau = 242.46\,\text{N}.}$$

NewtonDesk.com

$$\tau_{SB} = \frac{P}{\pi/4\, 10^2} = \frac{3.33 \times 10^3}{\frac{\pi}{4}(10)^2}$$

$$\tau_{SB} = 42.39 \ N/mm^2$$

a] 242.6 , 42.5 b] 42.5 , 242.6 c] 42.5 , 42.5
d] 242.6 , 248.6 .

—x—x—

Bolts of Uniform strengths.

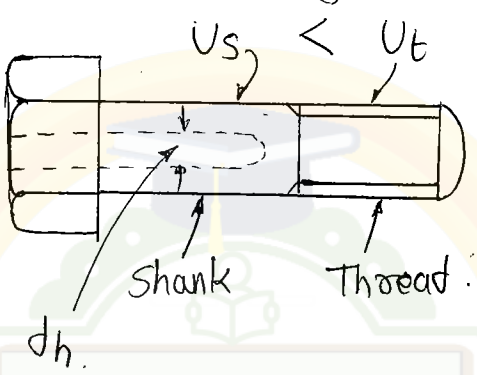

$$U = \frac{\sigma^2}{2E}$$

$$\sigma_t > \sigma_s$$

$$\sigma_t = \frac{P}{\frac{\pi}{4} d_c^2} , \quad \sigma_s = \frac{P}{\frac{\pi}{4} d^2}$$

$\sigma_t \uparrow \quad \sigma_s \downarrow$

If the energy stored in shank and bolt is same the bolt is called bolt of uniform strength.

$$\boxed{U_s = U_t}$$

$$\frac{\pi}{4} d_h^2 = \frac{\pi}{4} d^2 - \frac{\pi}{4} d_c^2$$

$$d_h = \sqrt{d^2 - d_c^2}$$

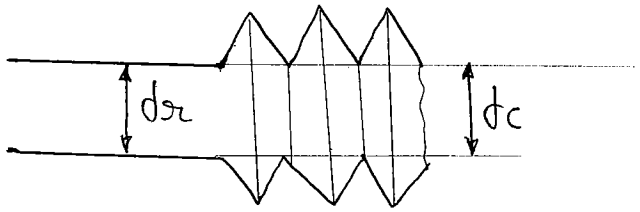

NewtonDesk.com

Total strain energy

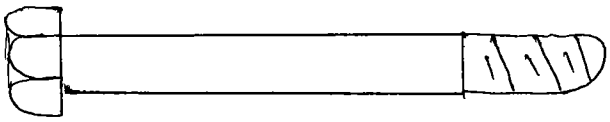

$$U = \frac{\sigma^2}{2E} \times A \times l.$$

DESIGN OF BEARINGS.

A bearing is a machine element which supports a moving moving member and contines its motion.

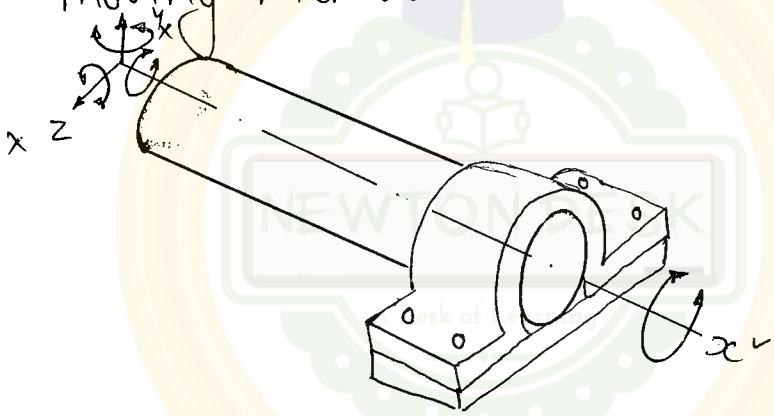

Bearings

1] Sliding Contact bearings

One surface slides over the other surface

2] Rolling contact Bearing

Point ~~of~~ ~~or~~ line contact.

NewtonDesk.com

Sliding Contact Bearing.

1] Journal Bearing

→ Radial loads

2] Collar bearings or Thrust Bearings

→ Axial loads.

→ Fx axial load

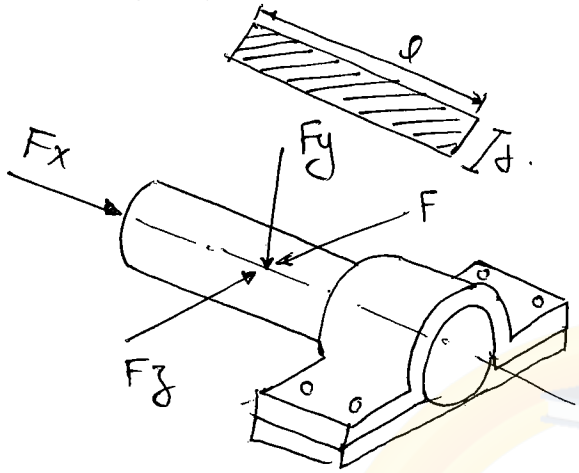

→ Fy, F, Fz - Radial loads

1] Journal Bearing

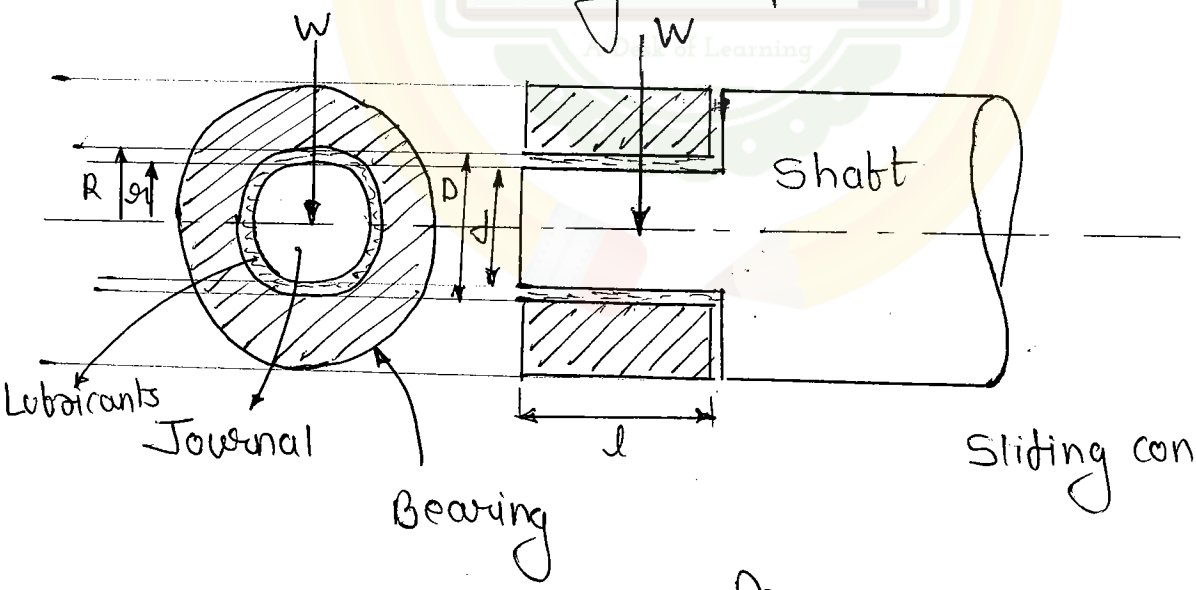

Sliding contact type.

d → dia of Journal

D → dia of Bearing.

Pressure

$$P = \frac{\text{load}}{\text{Projected area}}$$

$$= \frac{W}{ld}$$

Note :- load is always ⊥er to bearing

NewtonDesk.com

Clearance used

1] Radial clearance

$C = R - r$

2] Diametrical clearance

$C_d = D - d$
$= 2C$.

Types of Journal Bearing.

① Full Journal Bearing.

→ Angle of contact 360°

→ Supports load in all radial directions

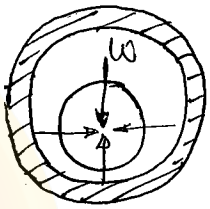

Ex:- IC engines, steam turbine, compressors etc.

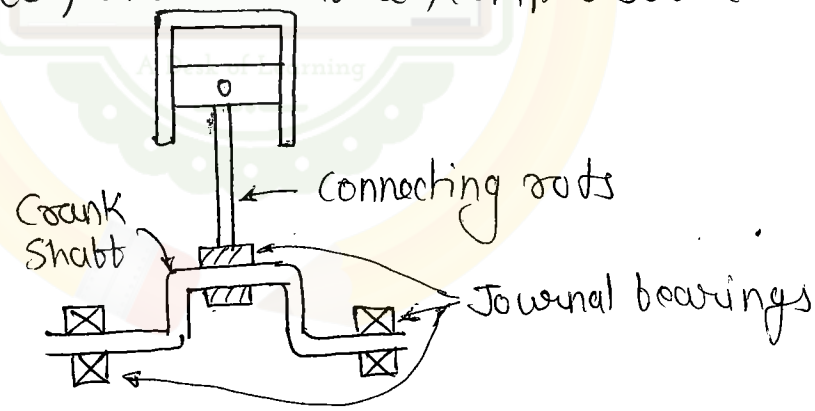

② Partial Journal Bearing.

→ self cooled bearing.

→ load carry only one direction

→ $\beta < 180°$

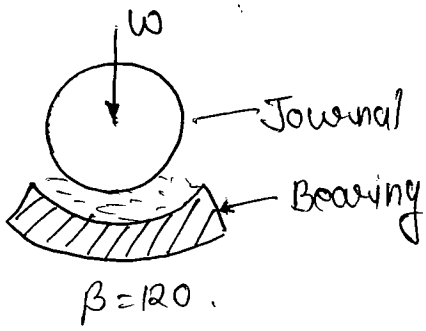

Ex:- Rail road car axles.

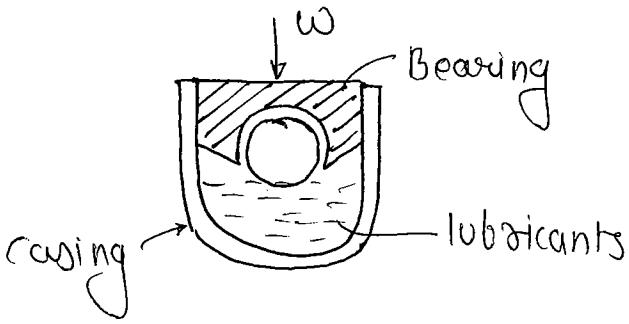

NewtonDesk.com

Fitted Journal bearing.

Radius of Journal is always equal to the radius (inner radius) of Bearing.

$r = R$.

Some type time eccentic alinement is taken into account.

Methods of lubrications

a] Thick Film lubrication

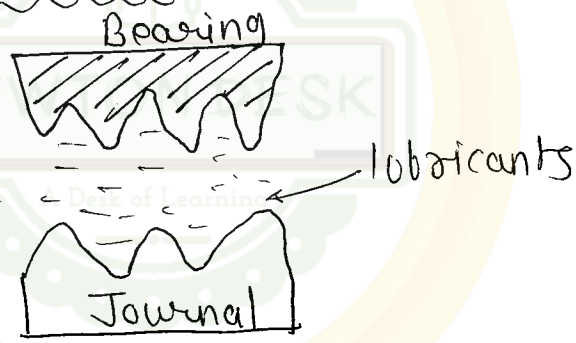

→ Surface finish do not effect the performance hence indipendent of Surface finish.

→ No contact.

b] Thin Film lubrication

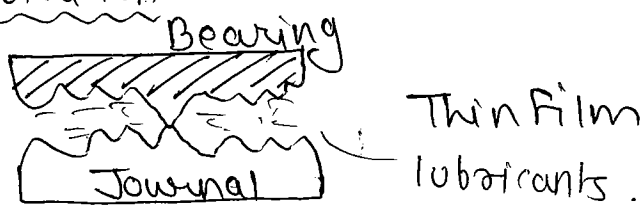

→ Some contact is there

→ High surface finish

c] Solid lubrication

d] Elasto hydrodynamic lubrication

used in point contact type of location

$P = \frac{W}{A}$

$A \downarrow \quad P \uparrow$

NewtonDesk.com

Thick Film lubrication.

1] Hydrodynamic lubrication

2] Hydrostatic lubrication

Hydrodynamic lubrication

The load supporting fluid film is created by action of journal

→ No pump is used.

Hydrostatic Bearing

Load supported fluid film is generated by external pressure source.

→ Pump is used to generate the pressure.

Ex:- M/c bead

① working speed is low hence pressure is not generated by bearing

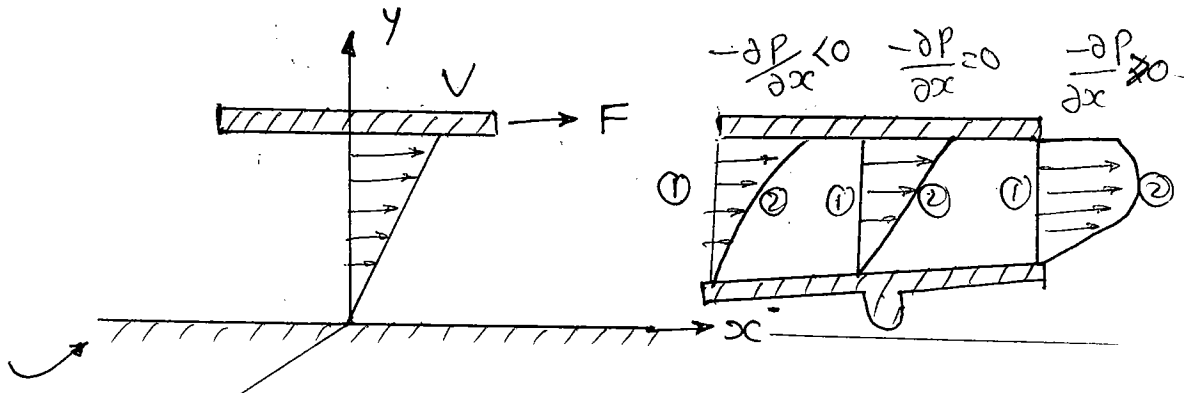

$\frac{\partial P}{\partial x} = 0.$

$\frac{P_2 - P_1}{L}$

Pressure gradient is zero in x direction

$\tau = \mu \frac{du}{dy}$

μ = absolute viscosity

N-s/m²
Pa-s or
kg/m-s

NewtonDesk.com

Kinematic viscosity

$$\nu = \frac{\mu}{\rho} \quad m^2/s \qquad \rho = \text{mass density}.$$

Because of plate velocity and adhesive force take fluid from low pr. to high pressure

$$-\frac{\partial P}{\partial x} < 0 \Rightarrow -\frac{\partial P}{\partial x} = 0 \Rightarrow -\frac{\partial P}{\partial x} > 0.$$

$$\frac{P_1 - P_2}{L} > 0.$$

→ Conditions for generating pressure

1. Wedging action — converging & diverging forces.
2. Proper lubricant
3. Relative velocity.

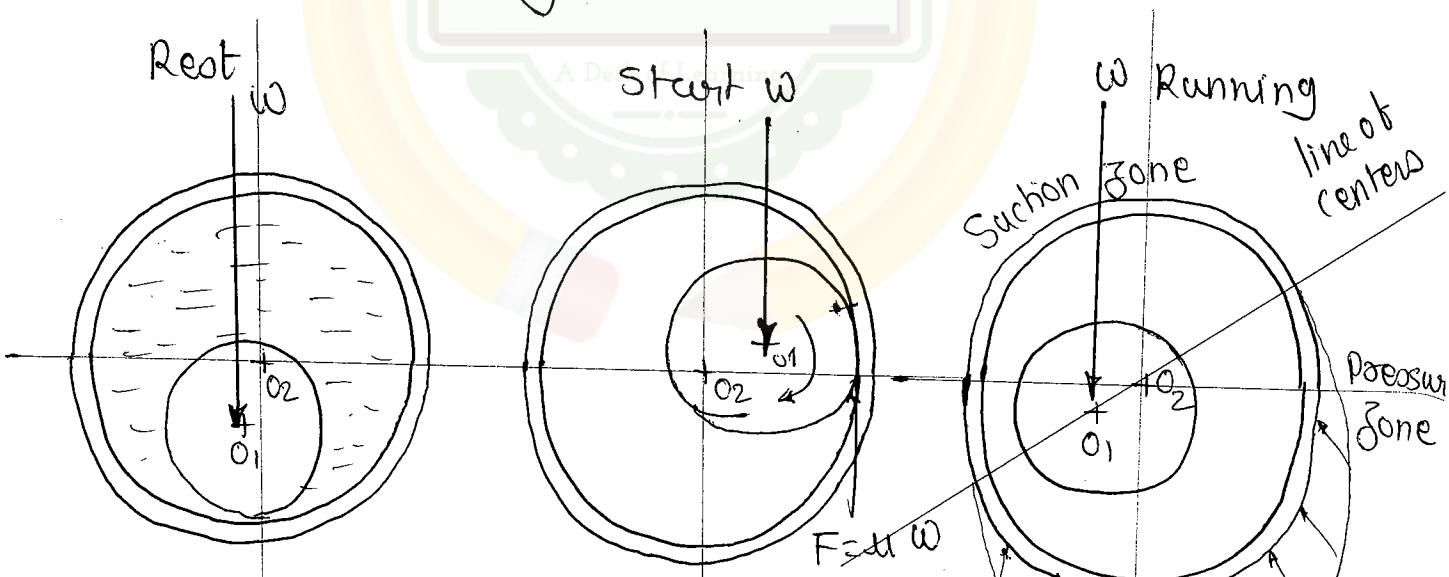

Metal to Metal Contact

① Metal to Metal Contact

② Thin film lubrication.

$$V = \frac{\pi D N}{60}$$

N↑ V↑ P↑

③ load is balanced by

① No metal to metal contact

② Thick film lubrication

③ load is balanced by pressure force

NewtonDesk.com

Performance of Journal Bearing.

→ Coeff of friction is main to determine the performance

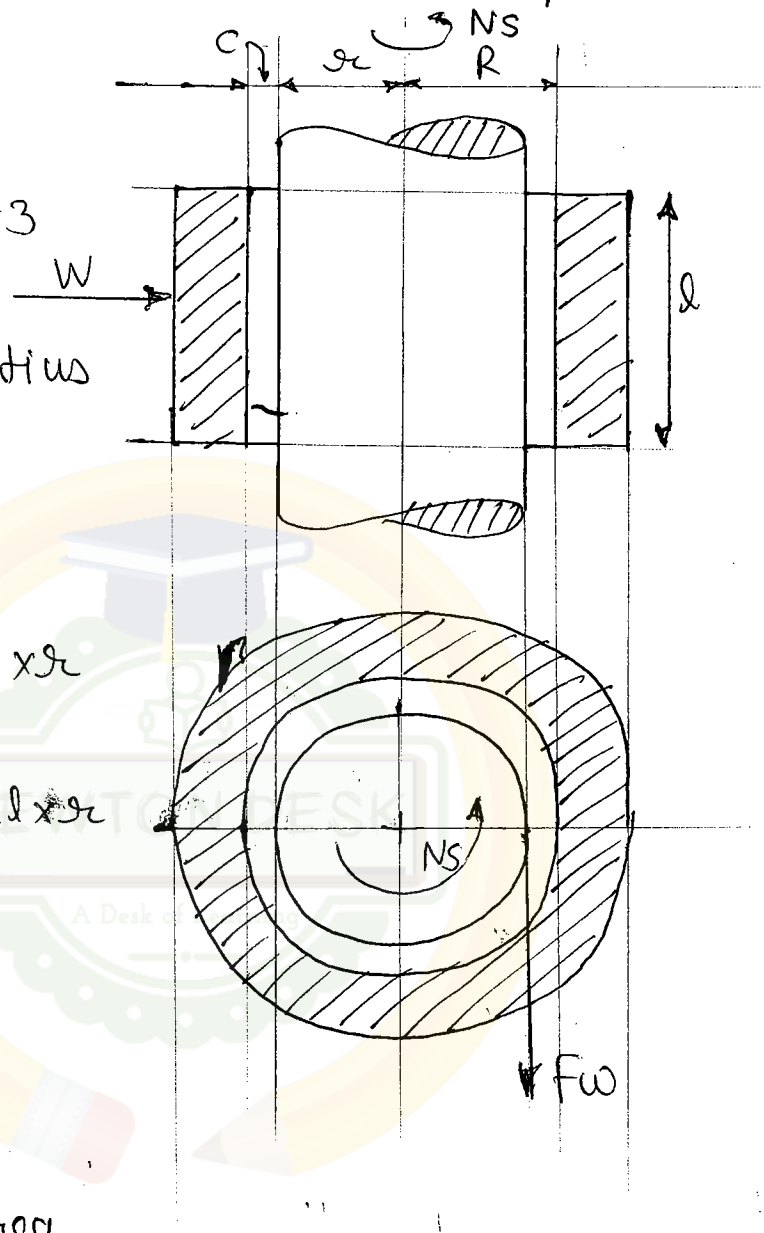

Petroffs equation 1883

Torque $T =$ Force x Radius

$= \text{Stress} \times \text{area} \times$

$= \tau \times 2\pi r L \times r$

$= \mu \frac{du}{dy} \times 2 \times \pi r l \times r$

$T = \frac{\mu 2\pi r N_s}{c} \times 2\pi r l \times r$

$T_F = F \times W \times r$

Pressure

$P = \frac{W}{\text{Projected area}}$

$P = \frac{W}{2r \times l}$

$W = P \times 2rl$

Friction torque

$T_F = F_\omega \times r$

$T_F = f \times P \times 2rl \times r$

NewtonDesk.com

Performace of journal bearing

$$f p \times 2 r^2 l = \mu \times \frac{2\pi r N s}{c} \times 2\pi r l \times r$$

$$f = 2\pi^2 \left(\frac{\mu N s}{p}\right)\left(\frac{r}{c}\right)$$

Assumption in this

① Lighter load is applied.
② Journal rotates concentrically

} Not fit for Bearings

$\frac{\mu N s}{p}$ ⇒ Bearing characteristic Number

$\frac{c}{r}$ ⇒ Radial clearance ratio.

NewtonDesk.com

2] Mckee's Equation.

→ At condition D.

Heat generated ↑
temp ↑
μ ↓
$\left(\frac{\mu N s}{p}\right)$ ↓

→ At condition D'

f ↓ Hg ↓ T ↓ μ ↑ $\left(\frac{\mu N s}{p}\right)$ ↑

→ At condition E

Hg ↑ T ↑ μ ↓ $\left(\frac{\mu N s}{p}\right)$ ↓ f ↑

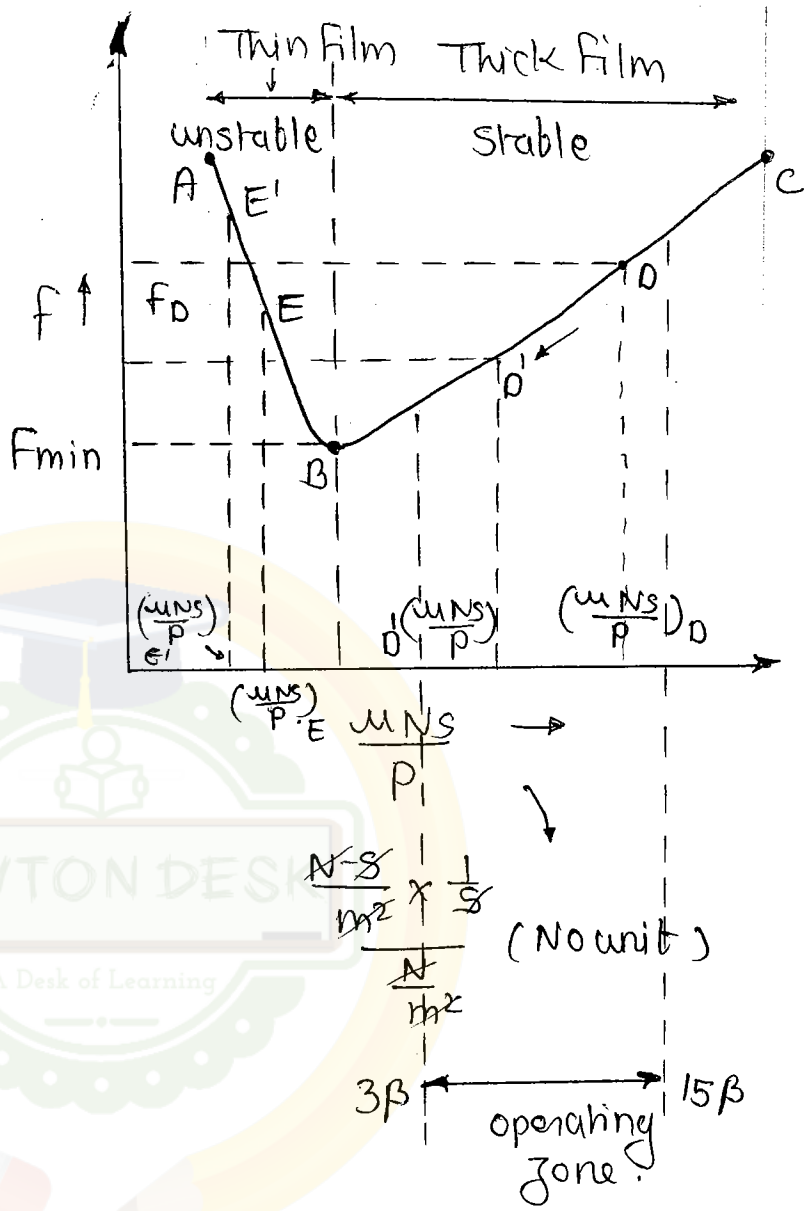

Compound Bearing.

HSB + HDB
Hydrostatic Bearing + Hydrodynamic Bearing.

$\frac{\mu N s}{p}$ corresponding to minimum coeff of friction is called bearing modulus, β.

Bearing modulus only deal with Fmin

Operating zone

$$\boxed{3\beta \leq \left(\frac{\mu N s}{p}\right)_{operating} \leq 15\beta}$$

NewtonDesk.com

$$f = \underbrace{0.326}_{= 0.33} \left(\frac{\mu N}{p}\right)\left(\frac{d}{C_d}\right) + K$$

N – revolution per min.

μ – $N\text{-}s/m^2$

N – rpm

p – N/m^2

K – Leakage factor.

$K = 0.002$

$0.75 \leq \frac{l}{d} \leq 2$.

Friction Torque

$T = F_f \times r$

Power loss = Heat generated, H_g

$= \frac{2\pi N T}{60}$

$= f W \cdot v$

$v = \frac{2\pi d N}{60}$.

H_d = Heat dissipated

$= C A (t_b - t_a)$

C = Heat dissipation coefficient.

A = Projected area of beam

t_b = bearing temp.

t_a = Ambient air temp.

NewtonDesk.com

Pg no 54.

1] $d = 40mm$.
$W = 3KN$.
$p = 1.3 MPa$.

$$p = \frac{load}{Projected\ area}.$$

$$1.3 = \frac{3\times10^3}{2rL}$$

$$r.L = \frac{3\times10^3}{2\times1.3}$$

$$L = \frac{3\times10^3}{40\times1.3}$$

$$L = 57.69.$$

$$\frac{L}{D} = \frac{57.69}{40} = 1.44. \quad \text{Ans 6].}$$

$\frac{L}{D} > 1$ long bearing
Design for less friction under thin film lubrication
Length is more, less leakage.

$\frac{L}{D} > 1$ Short Bearing
thick film lubrication
more leakage

$\frac{L}{D} = 1$ Square bearing.

4]. $D = 25mm$

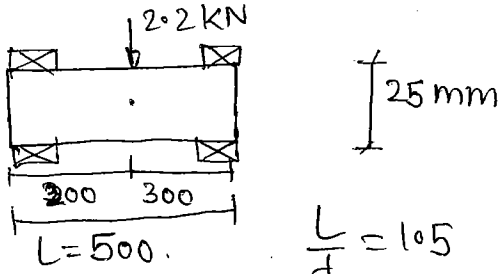

$$p = \frac{load}{Projected\ area}.$$

$$\frac{L}{d} = 1.5$$

NewtonDesk.com

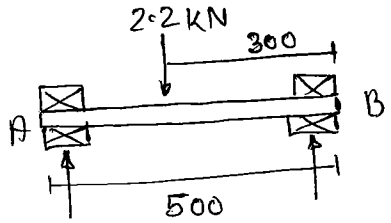

$R_A + R_B = 2.2\ kN$

$R_A \times 500 - 2.2 \times 300 = 0$

$R_A = 1.32\ kN$.

$R_B = 0.88\ kN$

$\frac{L}{D} = 1.5$

$L = 1.5D$

$P = \frac{load}{Ld} = \frac{1.32 \times 10^3}{1.5 \times 25 \times 25}$

$= 1.408$.

(5)

$d = 75mm$

$N_1 = 300\ rpm$

$\mu_1 = 0.06$ pa-sec

$C_1 = 0.2mm$

$P_1 = 1.4\ MPa$.

$N_2 = 400\ rpm$

Bearing contact number

$= \frac{\mu_1 N_1}{P_1}$

$= \frac{0.06 \times 300}{1.4}$

$= 12.85$.

To ~~to~~ stable the bearing

$\frac{\mu_1 N_1}{P_1} = \frac{\mu_2 N_2}{P_2}$.

$12.85 = \frac{0.06 \times 400}{P_2}$

$\boxed{P_2 = 186.\ MPa}$

(7).

$d = 150mm$

$l = 225mm$

$W = 9\ kN$

$N = 1000\ rpm$

$C = 0.075mm$

$h_d = 90\ kJ/min$

$\mu = ?$

$h_d = CA(T_b - T_a)$

$h_g = f W V$. J/s. or J/min

$h_g = h_d$.

$f \times 9\ kN \times \pi \times 150 \times 10^{-3} \times 1000 = 90\ kJ/min$

$f = 0.02$

NewtonDesk.com

$$f = 0.326\left(\frac{\mu N}{p}\right)\left(\frac{d}{C_d}\right) + K$$

$$(0.02)\, f = 0.032 \times \left(\frac{\mu \times 1000}{\underset{0.150\,m \times 0.22\,m}{9 \times 10^3\, N}}\right) \times \frac{150}{2 \times 0.075} + 0.002$$

$$\mu = \cancel{0.0035}\ 0.0157\ Pa\text{-}s.$$

(9)

$d = 50mm$

$l = 75mm$

$p = 2\ MPa.$

$N = 500 rpm$

$C = 11.6\ W/m^2\text{-}K^\circ C$

$A = 8 \times ld.$

$t_a = 28^\circ C$

$f = 0.0015$

$$H_d = CA(t_b - t_a)$$

$$H_g = F_w \times V$$

$$= 0.0015 \times p \times \cancel{A}\, ld \times \pi dN$$

$$= 0.0015 \times 2 \times 75 \times 50 \times \pi \times 50 \times 10^{-3} \times \frac{500}{60}$$

$$= 883.57 \times 10^3$$

$$H_d = H_g$$

$$\frac{883.57 \times 10^3}{1000} = 11.6 \times 8 \times (75 \times 10^{-3} \times 50 \times 10^{-3}) \times (t_b - 28)$$

$$H_g = 0.0015 \times 2\,\frac{N}{mm^2} \times \frac{50 \times 75}{mm^2} \times \pi \times 50 \times 10^{-3} \times \left(\frac{500}{60}\right)$$

$$= 14.72.$$

$$H_g = H_d.$$

$$14.72 = CA(t_b - t_a)$$

$$14.72 = 11.6 \times 8 \times 50 \times 10^{-3} \times 75 \times 10^{-3}\,(t_b - 28)$$

$$t_b = 70.31^\circ C$$

$$\boxed{t_b = 343.31 K}$$

NewtonDesk.com

Sommerfield Number / Bearing number.

$$S = \left(\frac{\mu N_s}{p}\right)\left(\frac{r^2}{c}\right).$$

c → Radial clearance

Pg 60.

Pro 55]

$W = 50\,kN$.

$L = 150\,mm$ } squre
$d = 150\,mm$

$c = 0.15\,mm$

$t_{min} = 0.03\,mm$

$\mu = 8\,cp. = 8\times10^{-3}$

$S = 0.0446$

$N = ?$

$$p = \frac{\text{load}}{\text{Projected area}} = \frac{50\times10^3}{150\times10^{-3}\times150\times10^{-3}} = 6666.6\times10^3$$

$$S = \left(\frac{\mu N_s}{p}\right)\left(\frac{r^2}{c}\right)$$

$$0.0446 = \left(\frac{8\times10^{-3}\times N_s}{6666.6\times10^3}\right)\times\left(\frac{150}{2\times0.15}\right)^2$$

$\cancel{0.0446 = 3\times10^{-4}\,N_s}$.

$N_s = 49.55$

$N = N_s\times60$

$N = 2973.33\,rpm$

NewtonDesk.com

Attitude or Eccentricity ratio (ξ)

h_o - min oil film thickness

$$\xi = \frac{\text{Eccentricity}}{\text{Radial clearance}} = \frac{e}{c}$$

$$= \frac{c - h_o}{c}$$

$$= 1 - \frac{h_o}{c}$$

$R = e + r + h_o$

$R - r = e + h_o$

$c = e + h_o$

If $e = 0$, $c = h_o$

(Not possible)

ϕ = attitude angle.

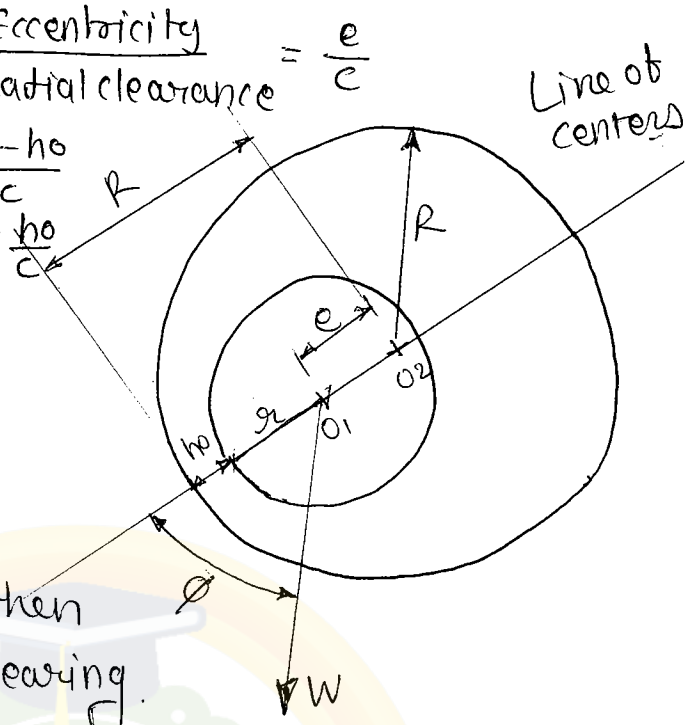

- If the ϕ maintain constant then that type of bearing is stable bearing.

ϕ = constant
stable bearing

- If the ϕ not maintain constant oil whirl can balance fluid forces created due to vibration.

Oil whirl	Oil whip.
unbalanced fluid forces	fluid forces frequency matches with frequency bearing material.

NewtonDesk.com

Pg no.
54

6]. $\varepsilon = 0.8$

$\frac{h_0}{c}$

$\varepsilon = 1 - \frac{h_0}{c}$

$0.8 = 1 - \frac{h_0}{c}$

$\frac{h_0}{c} = 0.2$

NewtonDesk.com

Rolling Contact Bearings.

Rolling contact Bearings (Antifriction bearings)

① **Ball Bearing**

→ Point Contact

② **Roller Bearings**

→ line contact

More load carrying capacity than roller bearings

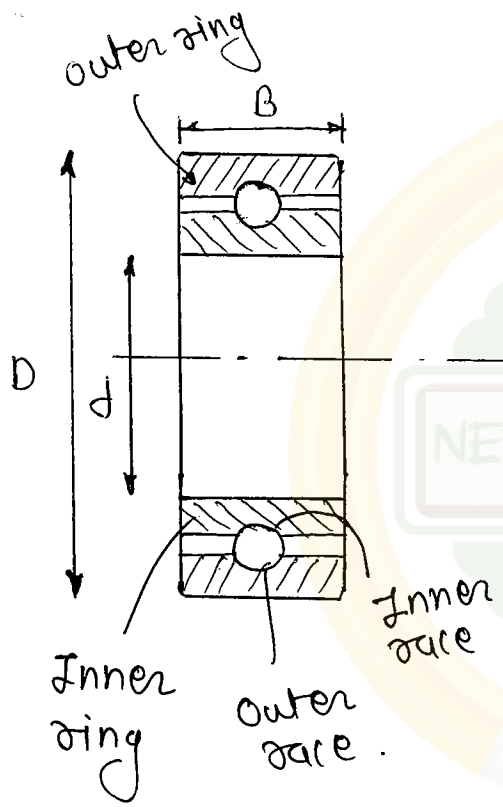

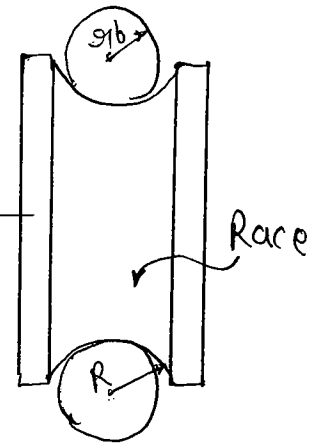

$R > r_b$.

d = Inner dia or dia of shaft

D = Outer dia

B = axial width.

High cromium steel - outer ring

More rigidity

NewtonDesk.com

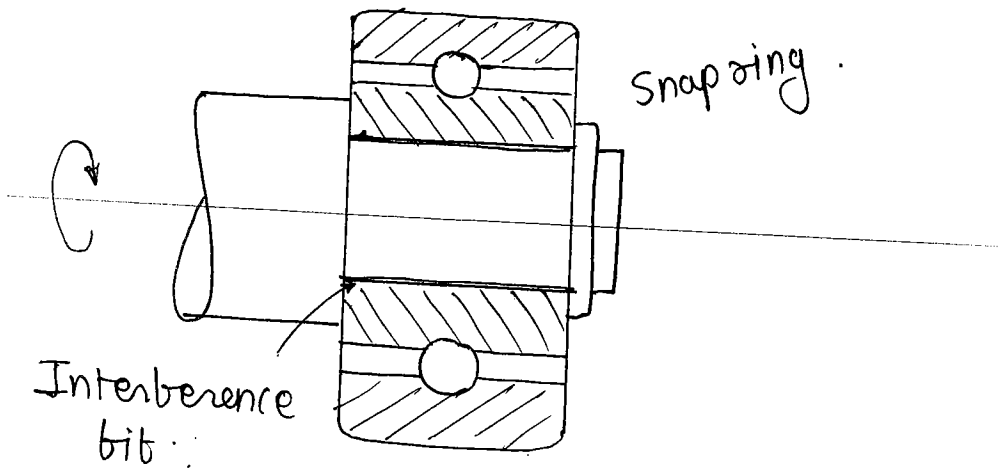

Types of ball bearings.

1. Deep groove ball bearings
2. Angular contact ball bearings
3. Self aligning " "
4. Thrust ball bearings.

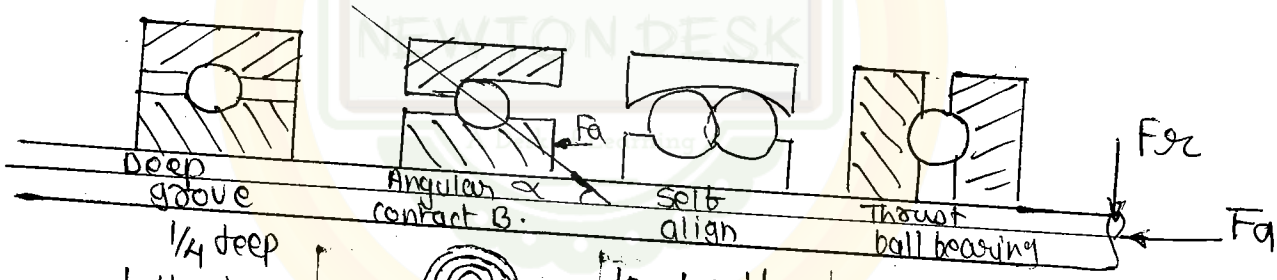

Deep groove

1/4 deep both side

Radial & axial load

axial load ↔ ↑ Radial load

Angular contact B.

In this case side is use to insert balls

Design to carry more axial & Radial load.

$$\frac{F_a}{F_r} > 1$$

↑ Radial load

← axial load

hence two bearing is used in pairs side by side

Self align

least coeff of friction

Radial load and axial load

It will work in angular missalinement

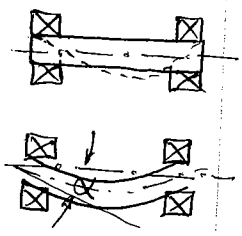

angular missalingment

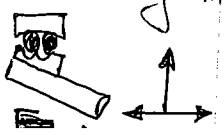

Thrust ball bearing

only support axial load

↔ axial load in both direction

NewtonDesk.com

Roller contact bearing

1] Cylindrical Roller bearing
2] Tapered Roller bearing
3] Spherical Roller bearing
4] Needle roller bearing

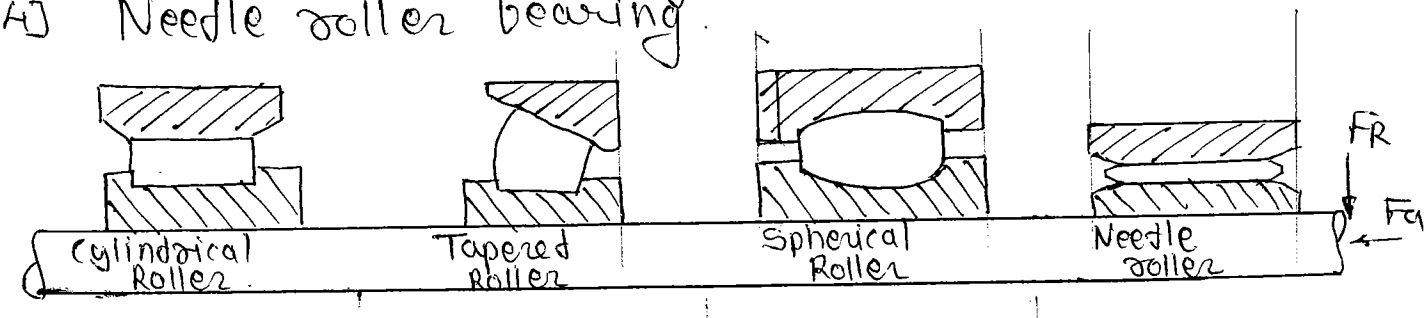

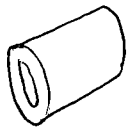

Only medium to heavy radial load

Both radial and axial load

Ex- turbine, automobile axle

Magnitude is heavy.

Radial and axial loads

Angular missalignment upto $\alpha = 3^\circ$ it sustain

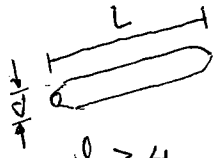

$\frac{l}{d} \geq 4$

less radial space but more axial space is required

Perfect alignment is req. otherwise it is bent.

Heavy radial load and No axial load can sustain

oscillating load can be sustain by this

Ex:- Heavy duty diesel engine

Piston pin bearing can be replaised by this

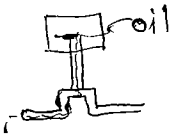

NewtonDesk.com

Rolling Contact bearing

Designation

1) SKF -

X X X X

- X → Type of Bearing
- X → Load carrying capacity
- XX → X5 Inner dia or Shaft dia.

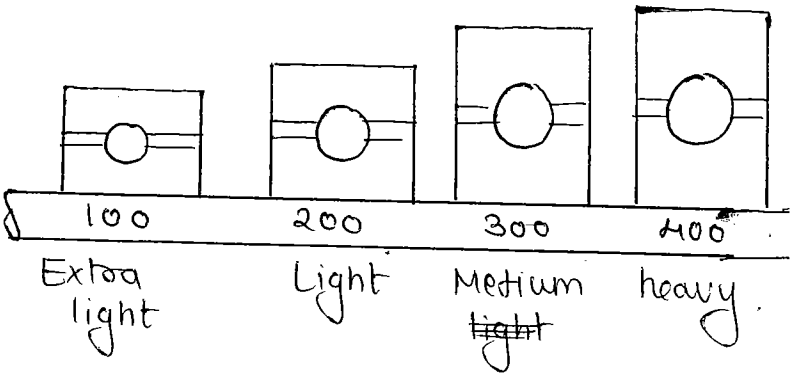

Ex:- 6307

- 63 → Medium duty
- 07 → 7×5 = 35 mm dia

2) BIS - Antifriction Bearing manufacturing association (AFBMA)

40 B C X X

- 40 → Ball Bearing
- B → Deep groove
- C → Width Series
- XX → diameter Series.

Ex:- ① 6307

BIS 35 BC 03 (07×5)

② 6410

BIS 50 BC 04

NewtonDesk.com

③ SKF

6112
6212
6312
6412

BIS 100series

12x5 BC 01 = 60 BC 01 - light (Extra)
= 60 BC 02 - light
60 BC 03 - Medium
60 BC 04 - heavy.

Designation d D B r Co C N

- d → Inner dia of Bearing
- D → Outer dia of Bearing
- B → Axil width.
- r → Fillet radius
- Co → Static load carrying capacity.
- C → Rated load Dynamic load carrying capacity
- N → Maximum speed

Static load carrying capacity [Co]

Load required to produce permanent deformation in the balls and races at the most heavy stress point of contact equals to 0.0001D, where D is the dia of ball in mm.

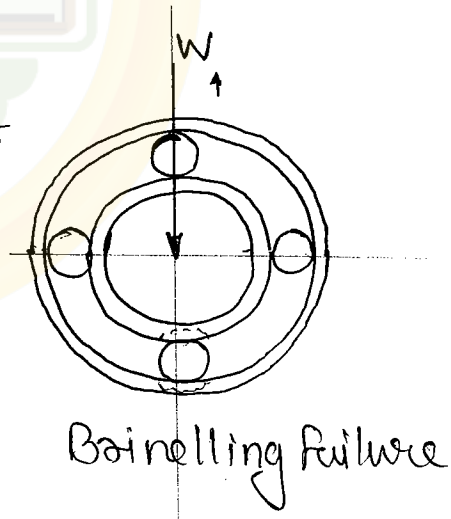

Brinelling failure

$$C_o = \frac{K D^2 Z}{5} \text{ - For ball bearing.}$$

K = Constant depends on ball dia.
D = Dia of ball
Z = No of balls.

$$C_o = \frac{K D Z L}{5} \text{ - For roller bearing}$$

L = length of roller.

NewtonDesk.com

Rated Life.

Life → No. of revolution completed before the evidence of fatigue crack.

Rated life
↓
L_{10} → 90% are in good condition

L_{50} → 50% are in good condition.
↓
avg life.

$L_{50} = 5 \times L_{10}$.

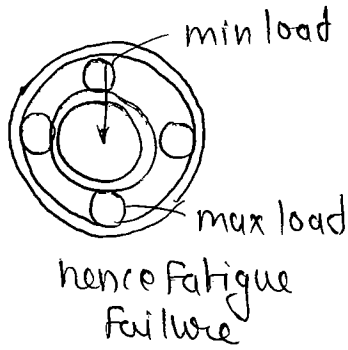

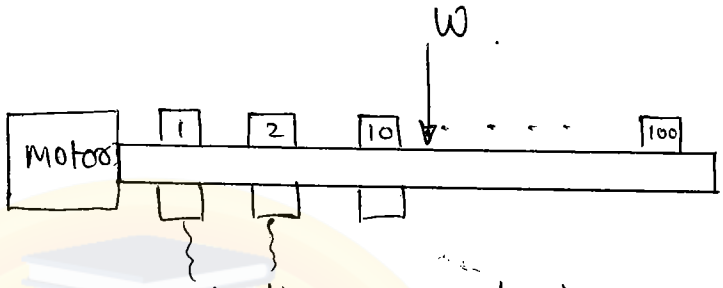

vibration sensing device

1 bearing is fail then 2 ....
upto 10 bearing is fail that is called L_{10} life.

The load is applied and calculated the rev. upto 10th bearing fail and the the load value is reduce to cover 10^6 rev. and corrosponding load is calculated

Rating Life (L_{10})

This is the life of group of apparently identical Ball or roller bearings, in number of revolution or hours at a given speed that 90% of bearings will complete or exceed befor any indication of failure

Basic load Rating (C)

It is that load which a group of apparently identical bearings can withstand for a rating life of one million revolutions.

NewtonDesk.com

$$L = \left(\frac{C}{P}\right)^K$$

L = Rated life
C = Basic load Rating
P = equivalent load.

K = 3 For Ball bearing
K = 10/3 For Roller Bearing

Equivalent load.

$$P = (XVF_r + YF_a)C_s.$$

X = radial load factor.
V = race Rotation Factor
= 1 for inner race rotation
= 1.2 for outer race rotation
F_r = radial load.
Y = Axial load factor
F_a = Axial load.
C_s = Service Factor

Life in million Revolution

$$L = \frac{60 n L_H}{10^6}.$$

n = Speed rpm
L_H = Life in hours.

NewtonDesk.com

Pg no 66

9].

6205 → 10.8 kN.

200 series.

6305 → 16.2 kN (rest are less than 10.8 kN)

300 series

Ans d]

10]. 6210 bearing.

3

C = 22.5 kN

L = 27 million rev

P = ?

$$L = \left(\frac{C}{P}\right)^K$$

$$27 = \left(\frac{22.5}{P}\right)^3$$

$$P = 7.5 \text{ kN}.$$

NewtonDesk.com

$L_{50} = 5 \times L_{10}$ — Rated life.

$L = \left(\frac{C}{P}\right)^K$

$P = X V F_r + Y F_a$.

$L = \frac{60 n L_H}{10^6}$.

Pg no 67.

13] $F_r = 2.5$ KN.

$F_a = F_t = 1.5$ KN.

$C_s = 1.5$.

40 hrs/week for 5 years

$n = 1000$ rpm

$X = 0.56$

$Y = 1.4$

$t = \left(\frac{C}{P}\right)^K$

$= \left(\frac{1.5}{2.5}\right)^3$

$=$

$L = \frac{60 n X L_H}{10^6} = 60 \times 1000 \times$

$n_H = 40 \times \frac{hr}{week} \times 52$ week $\times$ 5 years

$= 10400$ hr

$L = \frac{60 \times 1000 \times 10400}{10^6}$

$L = 624$

$L = \left(\frac{C}{P}\right)^K$

$P = (X \overset{1}{V} F_r + Y F_a) C_s$

$= (0.56 \times 1 \times 2.5 + 1.5 \times 1.4) 1.5$

$= 5.25$ KN.

$624 = \left(\frac{C}{5.25}\right)^3$

$C = 44.86$

NewtonDesk.com

(12)

$C = 48.545$ kN.

$L_H = 6000$ hrs (Avg life). $P = (XVF_r + YF_a)G$

$n = 500$ rpm.

$$L = \frac{60 \times 500 \times 6000}{10^6}$$

$L = 180$ million rev.

$$L = \left(\frac{C}{P}\right)^K$$

$$\frac{180}{5} = \left(\frac{48.545}{P}\right)^3 = L_{10}.$$

$P = 14.7$ kN.

Bearing Subjected to a cyclic loads.

Assume a bearing is subjected to load.

P_1 at n_1 rpm for α_1 % of time.

P_2 at n_2 rpm for α_2 % of time.

⋮

P_x at n_x rpm for α_x % of time.

If the bearing is subjected to only load P_1, then its life is, $L = \left(\frac{C}{P_1}\right)^3 \times 10^6$ revolution

Life consumed during one revolution, $\frac{1}{L_1} = \frac{P_1^3}{C^3 \times 10^6}$.

NewtonDesk.com

At load

P_1 speed n_1, rpm = α % of time

2000 7 min.

total revolution $N_1 = \alpha_1 n_1$ rev.

N_1 revolution, $\frac{N_1}{L_1} = \frac{N_1 P_1^3}{C^3 10^6}$.

Life consume for N_2 revolution $= \frac{N_2}{L_2} = \frac{N_2 P_2^3}{C^3 10^6}$.

$$\frac{N_1 P_1^3}{C^3 10^6} + \frac{N_2 P_2^3}{C^3 10^6} + \cdots + \frac{N_x P_x^3}{C^3 10^6} = \frac{N P_e^3}{C^3 10^6}.$$

$$N = N_1 + N_2 + N_3 + \cdots + N_x$$

$$P_e = \left[\frac{N_1 P_1^3 + N_2 P_2^3 + \cdots + N_x P_x^3}{N_1 + N_2 + \cdots + N_x}\right]^{1/3}$$

(equivalent load)

P_e = Equivalent load or Cubic mean load.

Pg no. 67.
Q 19 and 20.

Element no.	% of element time	load (KN)	Speed (rpm)
1	30	5	900
2	40	7	1440
3	30	3	720.

$N_1 = \alpha_1 n_1 = 30 \times 900$

$N_2 = \alpha_2 n_2 = 1440 \times 40$

$N_3 = 720 \times 30$.

$$P_e = \left[\frac{\frac{30}{100} \times 900 \times (5)^3 + \frac{40}{100} \times 1440 \times (7)^3 + \frac{30}{100} \times 720 \times (3)^3}{\frac{30}{100} \times 900 + \frac{40}{100} \times 1440 + \frac{720 \times 30}{100}}\right]^{1/3}$$

NewtonDesk.com

$$L_{10} = \left(\frac{C}{P_e}\right)^3 = \left(\frac{16.6}{6.066}\right)^3$$

$$= 20.46 \text{ million rev.}$$

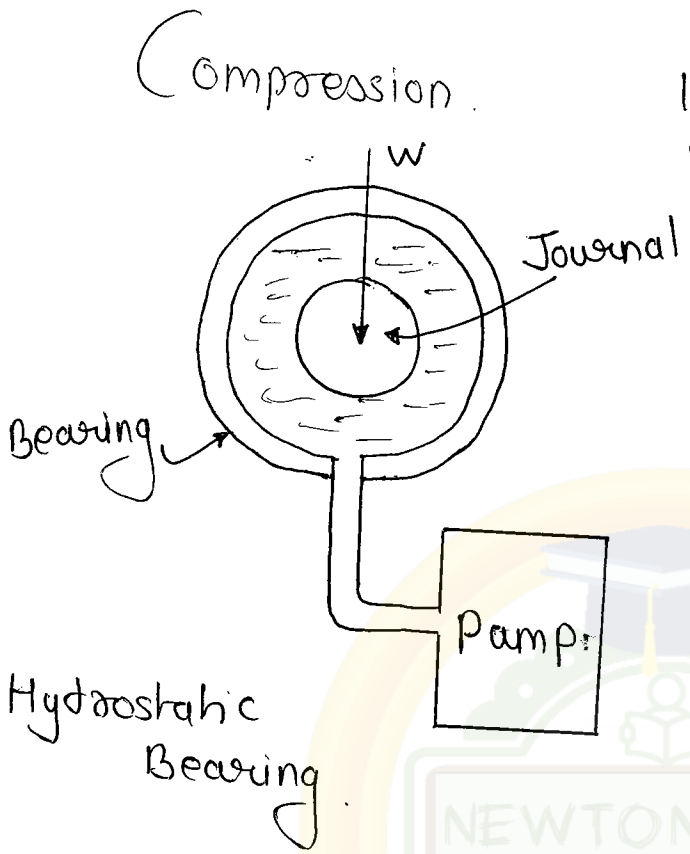

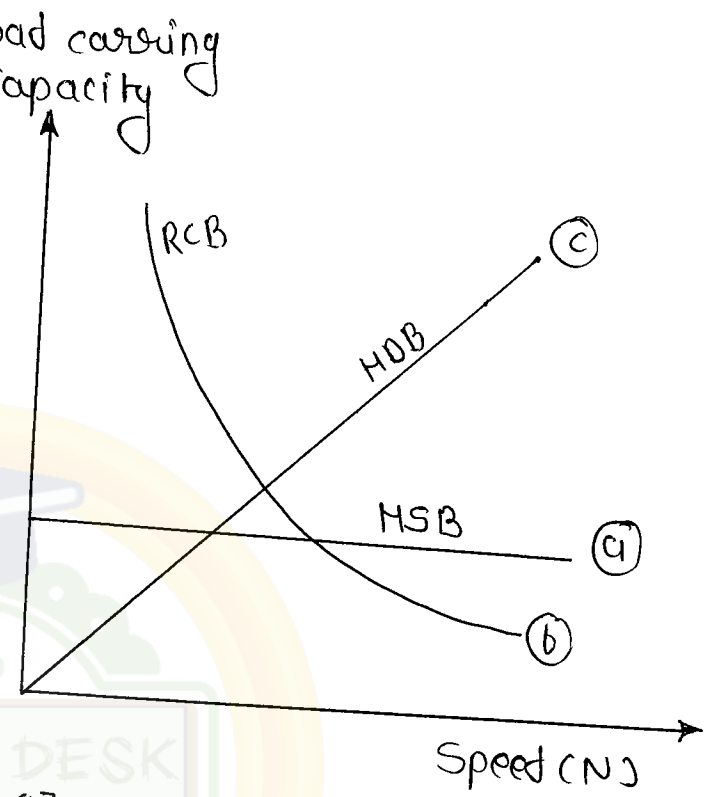

a] Hydrostatic
b] Rolling contact
c] Hydrodynamic.

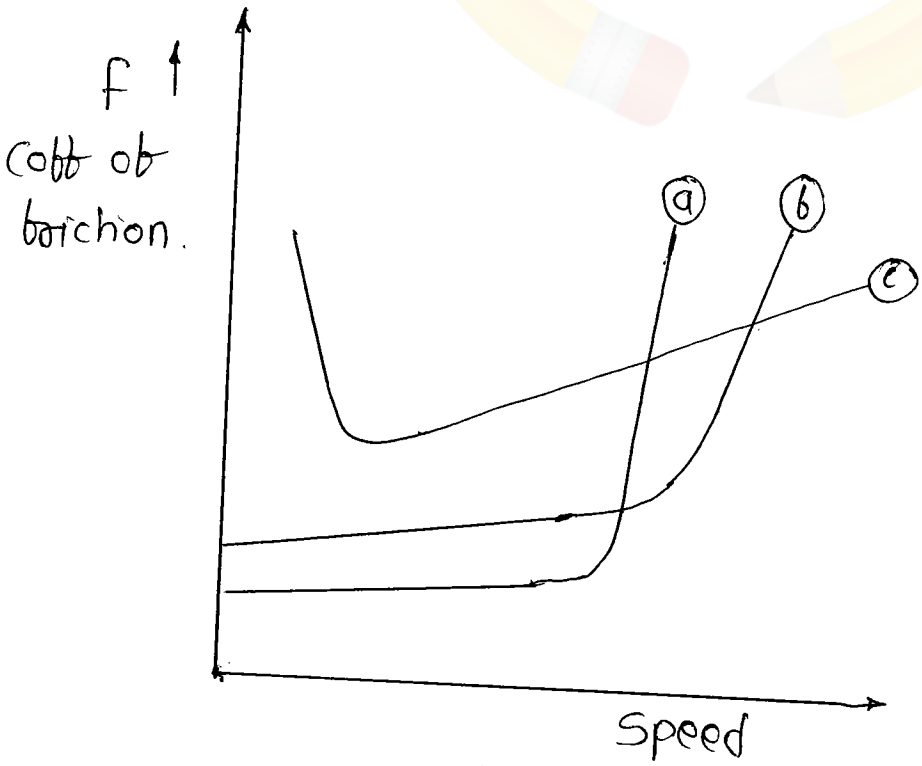

a – Ball
b – Roller
c – Hydrodynamic

NewtonDesk.com

3] Starting Torque.

Hydrodynamic bearing (HDB)
- High - because of high starting friction.

Rolling contact bearing (RCB)
- low - because of low starting friction.

4] Space.

→ Hydrodynamic B
More axial space, less radial

→ Rolling C.B More radial and less axial.

NewtonDesk.com

DESIGN OF BRAKES.

A brake is a device used to control the speed of a moving member by:

1] Providing suitable deceleration
2] Absorbing Energy.

Energies.

1] Kinetic energy of translation, $K.E_T = \frac{1}{2} m(v_1^2 - v_2^2)$

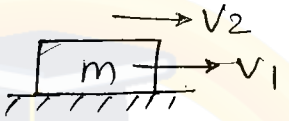

2] K.E of Rotation, $KE_R = \frac{1}{2} I(\omega_1^2 - \omega_2^2)$

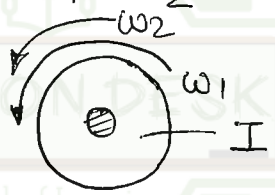

3] Potential Energy, $PE = Wh$

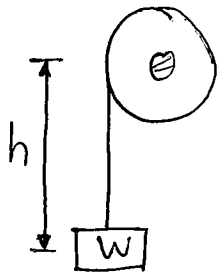

Classifications of Mechanical Brakes.

Brakes.

- Radial (Radial Force is applied)
  - External
    - Ex: Shoe brake, band brake
  - Internal
    - Ex:- Internally expanding shoe brake
- Axial (Axial Force is applied)
  - Ex:- Disc Brake

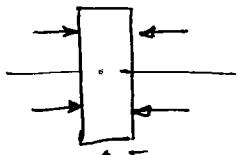

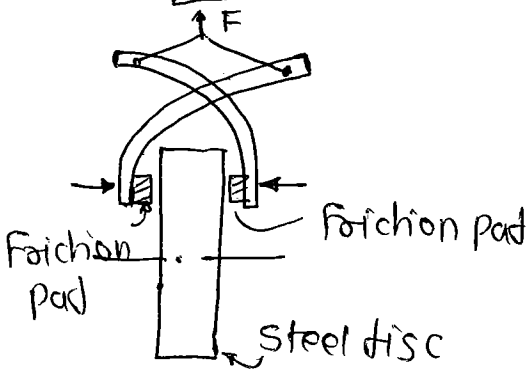

NewtonDesk.com

Principle of Shoe Brake.

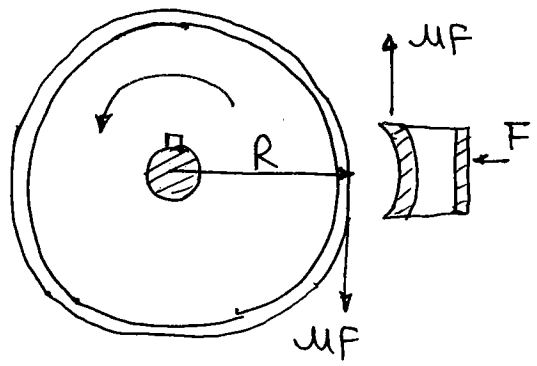

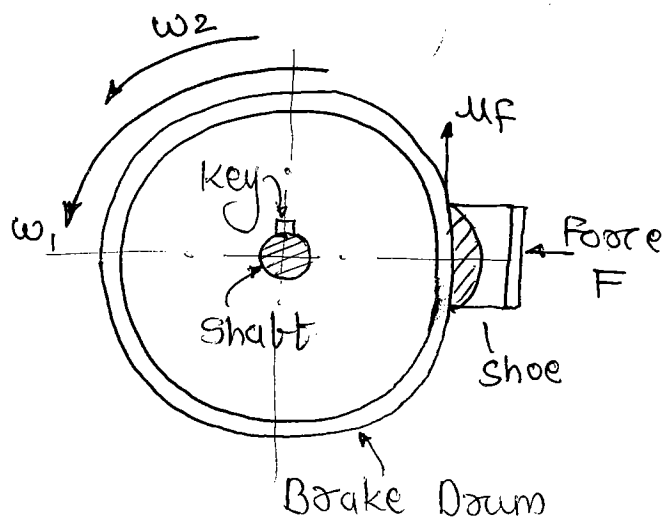

μ - coeff of friction

→ Friction Torque.

$T_B = \mu F \times R$.

→ Energy dissipated.

$\Delta E = T_B \times \theta$.

① $v = u + at$

$\omega_2 = \omega_1 + \alpha t$

$\alpha = \frac{\omega_2 - \omega_1}{t}$

② $v^2 - u^2 = 2as$

$\omega_2^2 - \omega_1^2 = 2\alpha\theta$.

$\omega_2^2 - \omega_1^2 = 2 \times \frac{\omega_2 - \omega_1}{t} \times \theta$

$\theta = \left(\frac{\omega_1 + \omega_2}{2}\right) t$.

→ Heat generated.

$H_g = T_B \times \left(\frac{\omega_1 + \omega_2}{2}\right) t$

$= \mu F \times R\omega \times t$

$= \mu F V \times t$.

$H_g/sec = \mu F V$

$\omega = \frac{\omega_1 + \omega_2}{2}$

$V = R\omega$

p - Pressure.

NewtonDesk.com

1 Shoe or Block Brake

Case I.

$\Sigma M_{pivot} = 0$.

$P \times l - R_N \times x = 0$

$P = \frac{R_N x}{l}$.

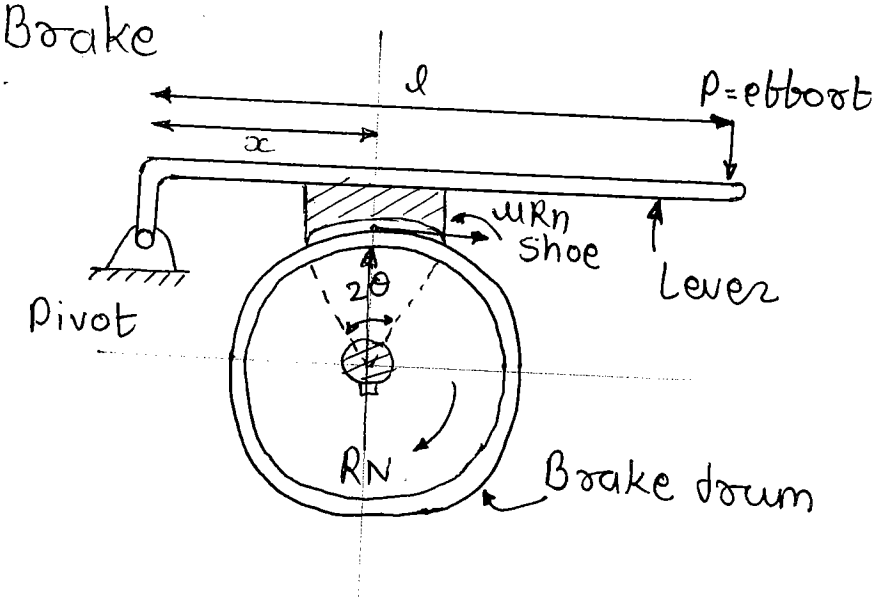

Case II

$\Sigma M_{pivot} = 0$.

$P \times l - R_N x + \mu R_N \times a = 0$.

AM FM

Self energising

Movement of $P \times l$ and μR_N are in same direction.

$P = \frac{R_N (x - \mu a)}{l}$.

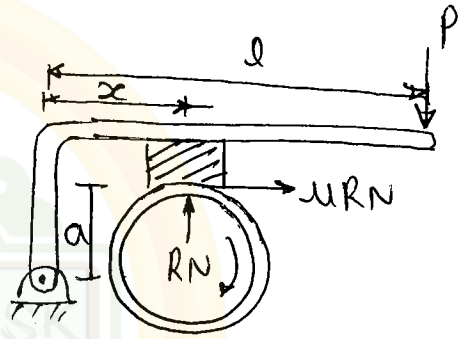

If $\mu a > x$

P -ve.

$R \leq 0$ self locking Brake.

To avoide self locking

$x \geq \mu a$

P is +ve

AM - Aplied movement

FM - Frichional movement

AM = FM = Same direction

If same magnitude

Self locking.

NewtonDesk.com

Case III

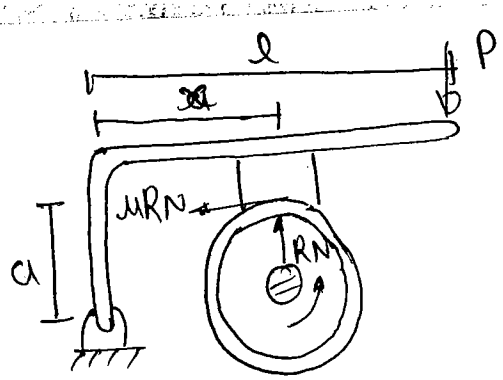

$$\underbrace{P \times l}_{AM} - \underbrace{R_N x}_{} - \underbrace{\mu R_N \times a}_{FM} = 0$$

$$P = \frac{R_N(x + \mu a)}{l}$$

→ Not self energising

If $\mu a \geq x$ P is +ve

$P \leq 0$ – Self locking brake.

Q:- If $\mu = 0.4$ and $x = 500mm$ what should be the value of a to get self locking.

$x = \mu a$ $\qquad P = \frac{R_N(x - \mu a)}{l}$.

$a = \frac{x}{\mu} = \frac{500}{0.4}$

$a = 1250mm$.

NewtonDesk.com

Short Shoe.

$2\theta \leq 45^\circ \rightarrow$ Pressure is uniform

Long Shoe

$2\theta \geq 45^\circ \rightarrow$ Pressure in non uniform

$$\mu' = \frac{4\mu \sin\theta}{2\theta + \sin 2\theta}$$ μ' = virtual coeff of friction

If $\theta = 0^\circ$.

$$\mu' = \frac{4\mu \sin 0}{2 0^\circ + \sin 2 0^\circ}$$ $\sin\theta$ is very small $\sin\theta = \theta$

$$= \frac{4\mu\theta}{2\theta + 2\theta} = \mu$$

$$\boxed{\mu' = \mu}$$

If $\theta = \pi/2$.

$$\mu' = \frac{4\mu \sin \pi/2}{2 \times \frac{\pi}{2} + \sin 2 \times \frac{\pi}{2}} = \frac{4\mu}{\pi}$$

$$\mu' = 1.273\mu$$

$$\boxed{\mu' = 1.3\mu}$$

$$1 \leq \frac{\mu'}{\mu} \leq 1.3.$$

NewtonDesk.com

Band Brake

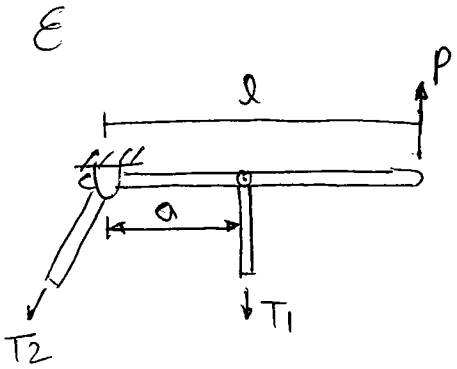

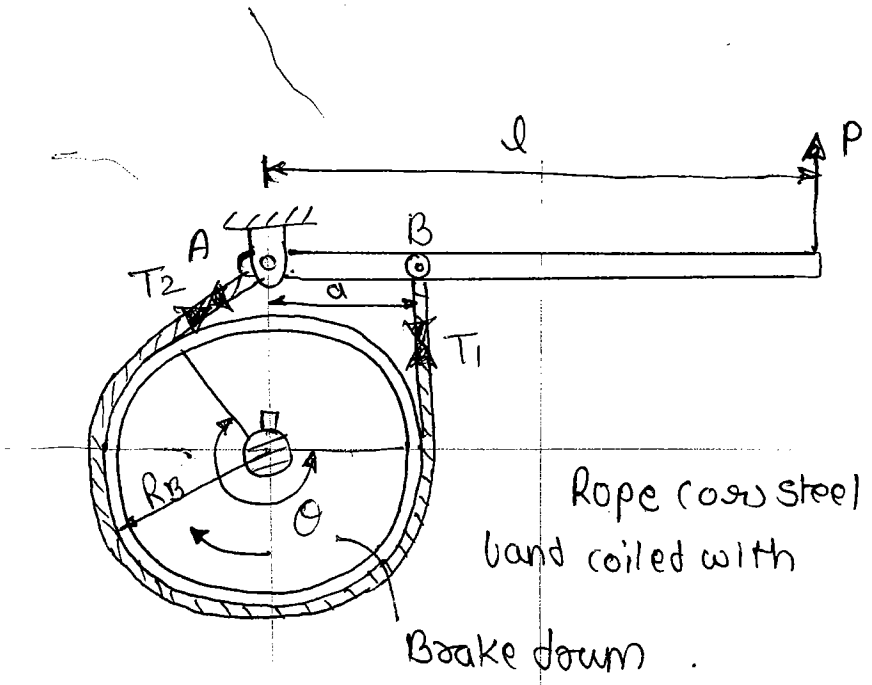

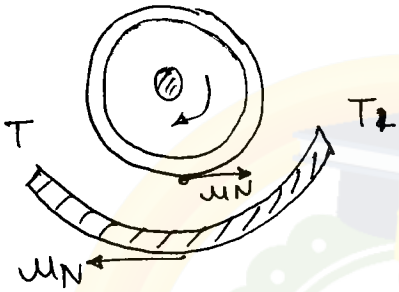

$\mathcal{E} M_{pivot} = 0$.

case i) $P \times l - T_1 \times a = 0$ — ① (↻) clockwise

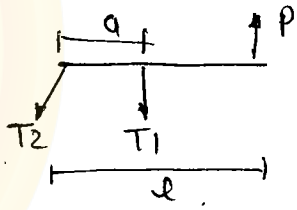

case ii) $P \times l - T_2 \times a = 0$ — ② (↺) Counterclockwise

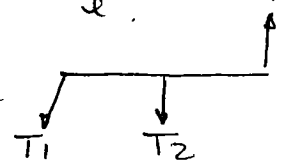

case ①

$$P = \frac{T_1 \times a}{l}$$

case ②i

$$P = \frac{T_2 \times a}{l}$$

Not self locking type.

$$\frac{T_1}{T_2} = e^{\mu\theta}$$

(Braking torque) $T_B = (T_1 - T_2) R_B$.

NewtonDesk.com

Simple band Brake.

One end of band is connected to pivot and the other end is connected to lever.

- Non self energising brake
- Not self locking brake.

In case of band brake Pressure is not uniform hence local wear take place in case of shoe brake, wear is uniform hence ~~shoe~~ band brake is not used in automotive.

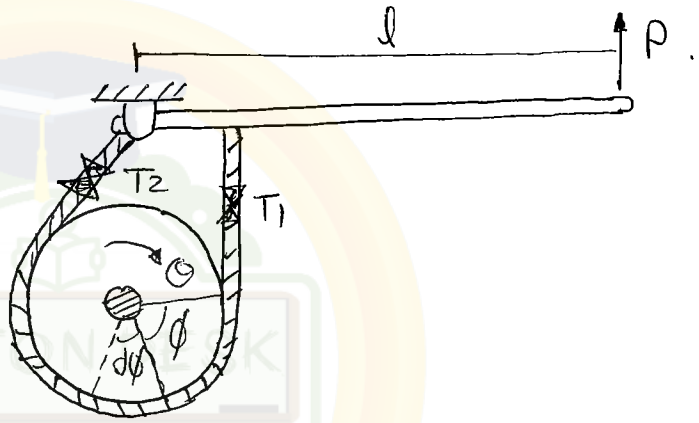

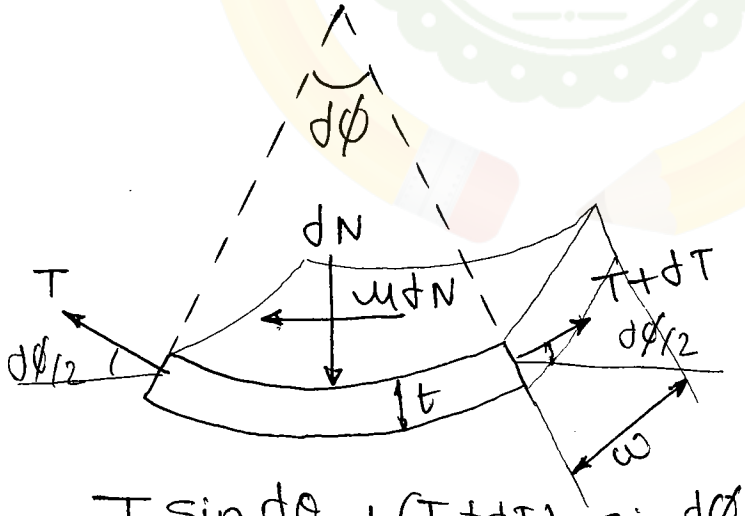

$$T \sin\frac{d\theta}{2} + (T+dT)\sin\frac{d\phi}{2} = dN.$$

$d\phi$ is very small

$$\sin\frac{d\phi}{2} = d\phi/2$$

t = thickness

w - width

$$T\frac{d\phi}{2} + \frac{d\phi}{2} = dN.$$

NewtonDesk.com

$$T\,d\phi = dN. \quad -(1)$$

Normal force = Pressure × area

$$dN = P \times (R\,d\phi)\,w$$

$$dN = PR\,d\phi \times w$$

$$T\,d\phi = PR\,d\phi \times w$$

$$P = \frac{T}{wR}.$$

P - pressure.

Max pressure

$$P_{max} = \frac{T_1}{WR}$$

Min Pressure

$$P_{min} = \frac{T_2}{WR}.$$

Pg no 88

Qno 28 and 29.

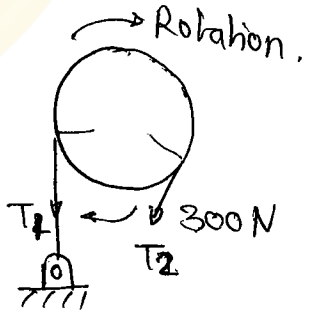

$R = 500\,mm$

$F = 300\,N.$

$\mu = 0.45.$

$$\frac{T_1}{T_2} = e^{\mu\theta}.$$

$$T_B = 800\,N$$

$$T_B = (T_1 - T_2)R_B$$

$$800 = (\cancel{300 - T_2})\times 500 \times 10^{-3}$$

$$T_1 - 300$$

$$T_1 = \cancel{301.6}.\ 1900.$$

NewtonDesk.com

$$\frac{T_1}{T_2} = e^{\mu\theta}$$

$$\frac{1900}{300} = e^{0.45\theta}$$

$$\ln \frac{1900}{300} = 0.45\theta$$

$$\text{rad } 4.101 = \theta$$

$$\boxed{\theta = 235.01^\circ}$$

$$P_{max} = \frac{T_1}{wR} = \frac{1900}{30\times10^{-3}\times500\times10^{-3}}$$

$$= 126.66\times10^{3}\ N/m^2$$

$$= 126.66\ kN/m^2$$

Q no. ~~8~~ 1 and 2

Pg no 84

$m = 1500$ kg

$v = 108$ km/hr

$S = 100$ m

$D = 80$ cm

$T_b = ?$

$S = ut + \frac{1}{2}at^2$

$v^2 - u^2 = 2as$

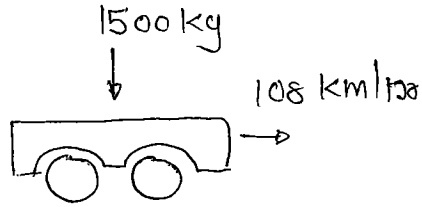

$$T_b = (T_1 - T_2)R$$

$$K.E = \frac{1}{2}mv^2$$

$$= \frac{1}{2}\times1500\times\left(\frac{108\times1000}{60\times60}\right)^2$$

$$= 0.675\ kg\ \frac{km^2}{s^2}$$

$$W.D = F_t \times S$$

$$0.675 = F_t \times S$$

$$10^6 \times 0.675 = F_t \times 100$$

$$F_t = 6.75\times10^{+3}\ N$$

$$T_b = F_t \times d/2 = 6.75\times10^{+3}\times\frac{80\times10^{-2}}{2}$$

$$= 2.7\times10^{+3}\times100 = 2.7\ kN\text{-}m$$

NewtonDesk.com

(2) $F_t = \mu R$. $\frac{F_t}{4} = \mu \frac{R}{4}$

$6.75 \quad \frac{2.7 \times 10^3}{4} = \mu \times 1500 \times 9.81$

$\boxed{\mu = 0.458}$.

Qno3 and 4.

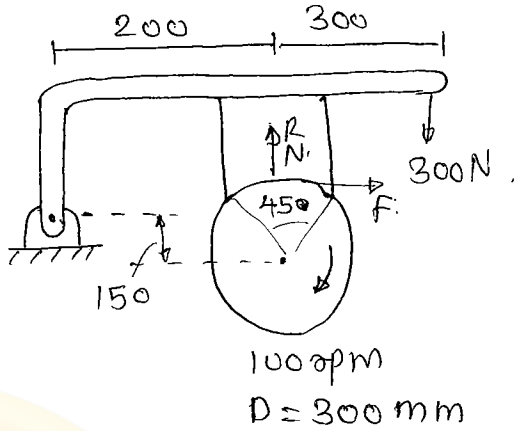

$F \times 500 - R_N \times 200 + \mu R_N \times 150 = 0$

$F \times 500 = R_N \times 200$

$300 \times 500 = R_N \times 200$

$R_N = 750N$.

$T = \mu R_N \frac{D}{2} = 0.24 \times 750 \times \frac{300 \times 10^{-3}}{2}$

$= 27$ N-m

(4) Heat generated

$H_g = T \times \theta$.

$= T \times \left(\frac{\omega_1 + \omega_2}{2}\right) \times t$.

$= 27 \left(\frac{\frac{2\pi \times 100}{60}}{2} + 0 \right) 5$

$= 706.85$ Joules.

(5).

$\mu' = \frac{4\mu \sin\theta}{2\theta + \sin 2\theta}$

$= \frac{4 \times 0.3 \sin 45}{\frac{\pi}{4} \times 2 \times 45 + \sin 90}$

do not put 45 — put in rad.

$\mu' = 0.330$

NewtonDesk.com

Q 6 to 9

$D_r = 650mm$.

$D_b = 1000mm$

load = 2 tonnes.

$V = 9kmph$.

$S = 2.75m$

$\mu = 0.2$ (Four shoe)

$p = 0.3 MPa$.

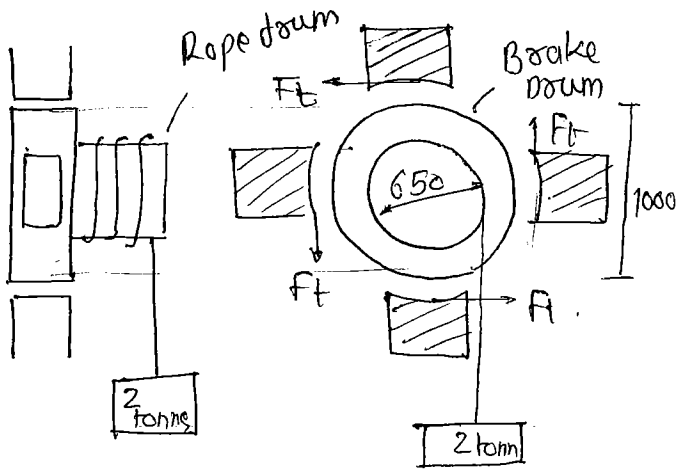

(6) $u = \frac{9 \times 1000}{60 \times 60} = 2.5 m/s$.

$v^2 - u^2 = 2as$.

$0 - (2.5)^2 = 2 \times a \times 2.75$

$a = -1.13 m/s^2$.

$F_{total} = W - (ma)$.

$= 2000 \times 9.81 - (2000 \times -1.136)$.

$= 21892.72 N$.

$= 21.89 kN$.

$F = \frac{\mu N}{4}$

(7) torque $= F_{total} \times \frac{D_r}{2} = F_t \times \frac{D_b}{2} \times 4$.

$F_{total} \times \frac{650 \times 10^{-3}}{2} = F_t \times \frac{1000 \times 10^{-3}}{2} \times 4$

$21.89 \times \frac{650 \times 10^{-3}}{2} = F_t \times \frac{1000 \times 10^{-3}}{2} \times 4$.

$$\boxed{F_t = 3.55 kN}$$

NewtonDesk.com

(8).

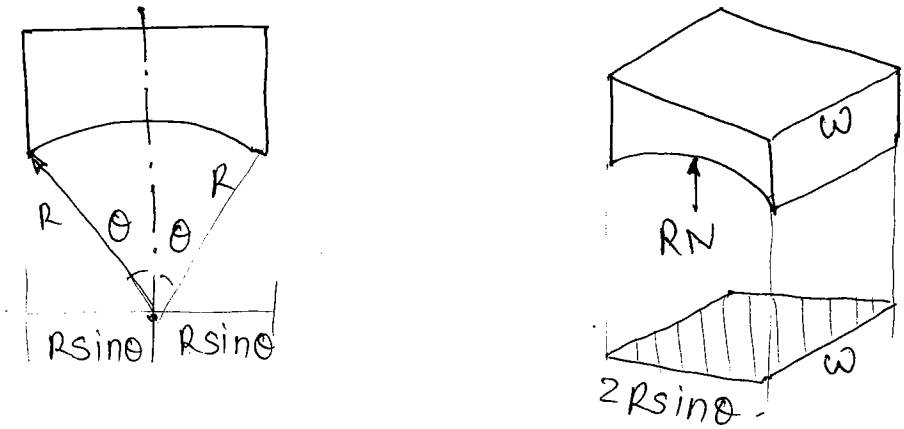

Pressure,

$$P = \frac{\text{Normal reaction}}{\text{Projected area}}$$

$$= \frac{RN}{w \times 2R\sin\theta}$$

$Ft = \mu RN$

$$0.3 \times 10^6 = \frac{\cancel{\mu \times} Ft/\mu}{w \times 2 \times 1000 \times 10^{-3} \times \sin 45/2}$$

$$= \frac{17.175 \times 10^3}{w \times 2 \times \frac{1000 \times 10^{-3}}{2} \times \sin 45/2}$$

$\frac{N}{m^2}$ $\frac{N \times 10^6}{1000 \times 1000}$

$$w = 0.1546 \text{ m}$$

$$\boxed{w = 154.6 \text{ mm}}$$

(9). Heat generated

$$Hg = T_b \times \theta$$

$$= Ft \times \frac{D}{2} \times 4 \times \frac{\pi}{4}$$

$$= 3.55 \times \frac{1000 \times 10^{-3}}{2} \times \cancel{4} \times \frac{\pi}{\cancel{8}\,2}$$

$$Hg/sec = \underbrace{Ft}_{\mu RN} \times V \quad \text{or } T\omega$$

NewtonDesk.com

time req. for stopping.

$V = u + at$

$0 = 2.5 - 1.136t$

$t = 2.200 \text{ sec}$.

$Hg = \mu R N \times v \times t$

$\theta = \left(\frac{\omega_1 + \omega_2}{2}\right) t$.

$v = \frac{D_g}{2} \times \omega$. $\boxed{V = R\omega}$

$\frac{m}{sec}\, 2.5 = \frac{650}{2} \times \omega$

$\omega_1 = 7.69 \text{ rad/sec}$

$\omega_2 = 0$.

$T = F_{total} \times \frac{0.650}{2}$

$= 7.11 \text{ KN-m}$.

$Hg = T \times \theta$

$= 7.11 \times \left(\frac{\omega_1 + \omega_2}{2}\right) t$.

$= 7.11 \times \left(\frac{7.69 + 0}{2}\right) \times 2.2$

$= 60.14 \text{ KJ}$.

~~Torque (T) = $F_{total} \times R \times \omega \times t$~~

$= 21.892 \times \frac{1000 \times 10^{-3}}{2} \times 54.6 \times 10^{-3} \times 2.2$

Q 10 and 11

$T = 450 \text{ N-m}$ (↻)

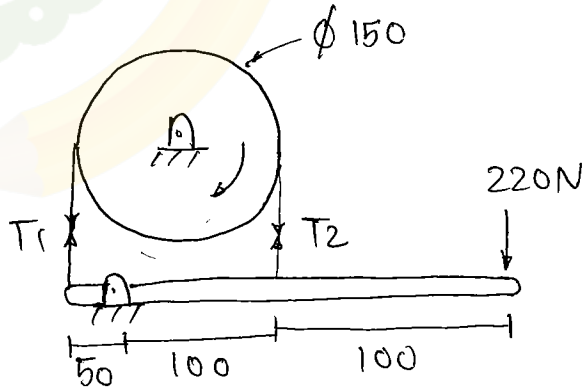

$\Sigma M_{pivot} = 0$

$220 \times 200 + T_1 \times 50 = T_2 \times 100$

$T_1 50 - T_2 100 = -220 \times 200$ — (1)

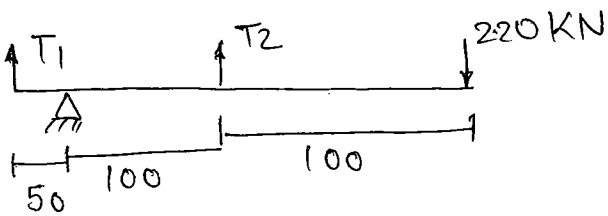

$T = (T_1 - T_2) R$.

$450 = (T_1 - T_2) \times \frac{150}{2}$.

$\frac{450 \times 2}{150} = T_1 - T_2$

$T_1 - T_2 = \frac{450 \times 2 \times 10^3}{150} = 6 \times 10^3 \text{ N-m}$ — (2)

NewtonDesk.com

$T_1 = 12800$

$T_2 = 6800$

$$\frac{T_1}{T_2} = e^{\mu\theta}$$

$$\frac{12800}{6800} = e^{\mu \times \frac{\pi}{180} \times 180}$$

$$\boxed{\mu = 0.29}$$

(11) $\mu = 0.4$

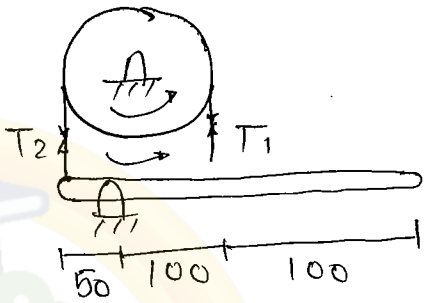

$220 \times 200 + T_2 \times 50 = T_1 100$

$T_1 100 - T_2 50 = 220 \times 200$ — (1)

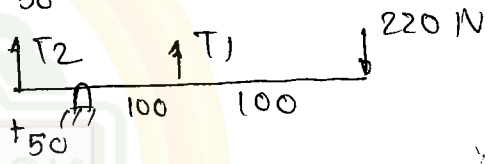

$$\frac{T_1}{T_2} = e^{\mu\theta}$$

$$\frac{T_1}{T_2} = e^{0.4 \times \pi}$$

$T_1 = 3.51\, T_2$

$T_2 = 146.179$

$T_1 = 513.089$

$$T = (T_1 - T_2)\frac{150}{2}$$

$$= (513.089 - 146.179)\frac{150}{2}$$

$$= 27518.30 \text{ N-mm}$$

$$T = 27.51 \text{ N-m}$$

NewtonDesk.com

Q:- A Force of 400N ~~of~~ is applied to the brake drum of 0.5m diameter in a band brake system as shown in fig when the wrapped angle is 180°. If the coeff. of friction is 0.25 the braking torque applied in N-m is

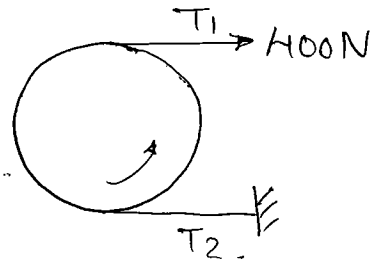

Direction of arrow in free space show T_1 direction

$$\frac{T_1}{T_2} = e^{\mu\theta}$$

$$\frac{T_1}{T_2} = e^{0.25 \times \cancel{180} \times \frac{\pi}{\cancel{180}}}$$

$$T_1 = 2.19\, T_2$$

$$T_2 = 182.37$$

$$T_b = (T_1 - T_2)\, D/2$$

$$= (400 - 182.37) \times \frac{0.5}{2}$$

$$T_b = \cancel{870.19}\ 54.40 \text{ N-m}$$

NewtonDesk.com

Differential Band Brakes.

$a > b$.

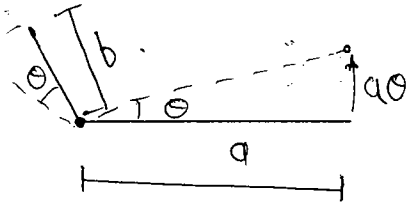

$a\theta > b\theta$.

$\boxed{a > b}$

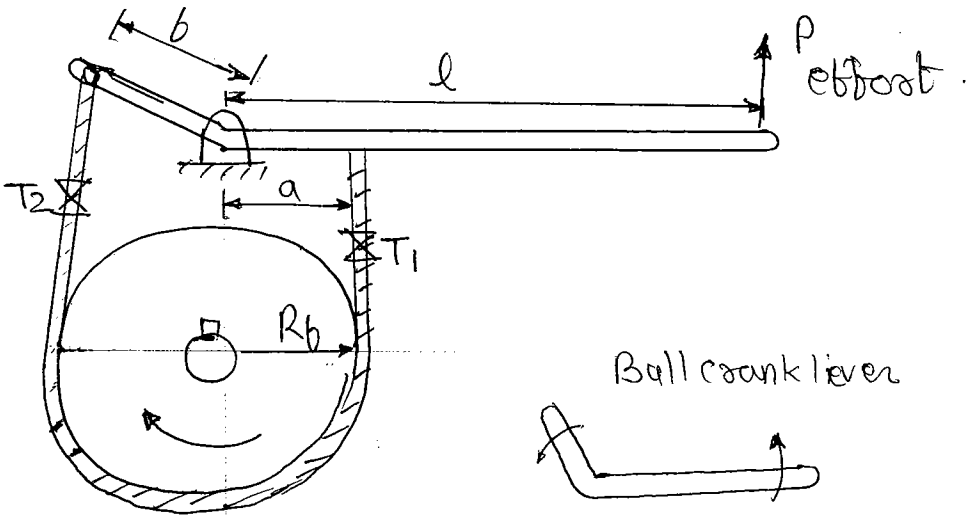

Ball crank lever

$$\frac{T_1}{T_2} = e^{\mu\theta}$$

Torque, $T = (T_1 - T_2) R_b$.

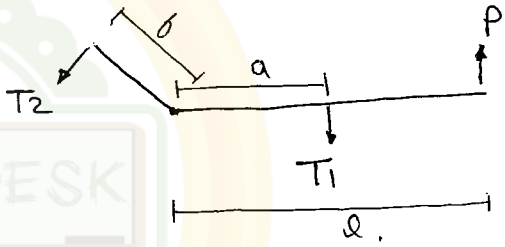

$\Sigma M_{pivot} = 0$.

$$P \times l - T_1 \times a + T_2 \times b = 0.$$

$$T_1 a - T_2 b = Pl.$$

For self locking $P \leq 0$.

$$T_1 a - T_2 b = 0.$$

$$\frac{T_1}{T_2} = \frac{b}{a} = e^{\mu\theta}$$

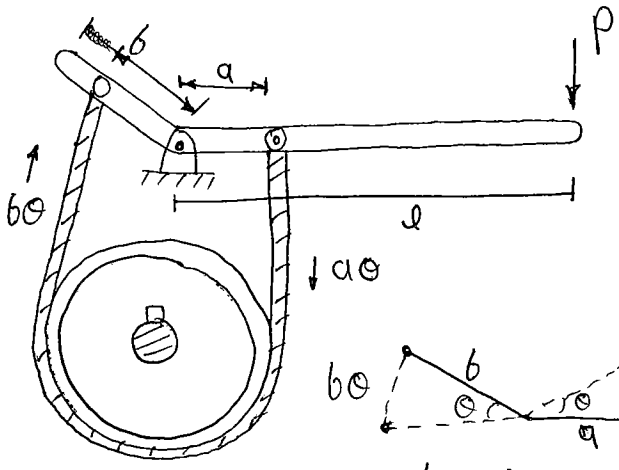

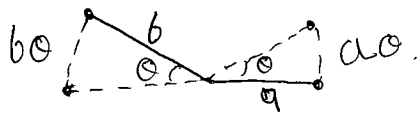

$b\theta > a\theta$

$b > a$

$b\theta$ is > than $a\theta$ hence more

NewtonDesk.com

Internal Expanding Shoe Brake (Drum Brake).

$\Sigma M_{O_1} = 0$ (leading shoe)

$F \times l - N \times y + F_t \times x = 0$

Applied movement AM — Friction movement FM.

The direction of AM and FM is same hence it is self energizing brake.

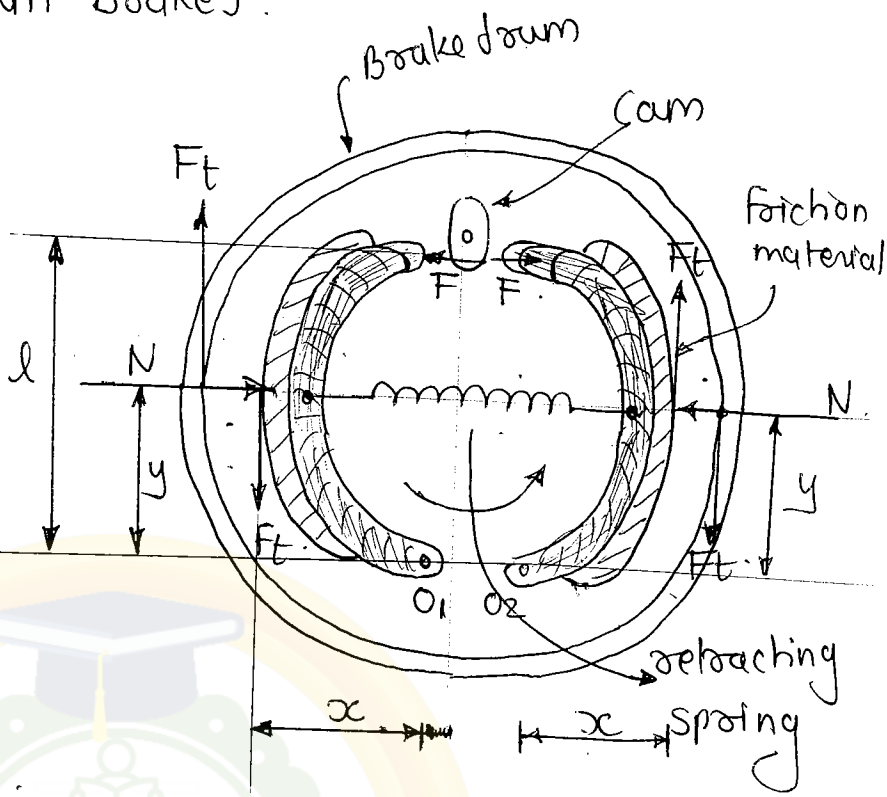

Take moment about O_2.

$\Sigma M_{O_2} = 0$.

$F \times l - N \times y - F_t \times x$

AM — FM

AM and FM are in opposite direction (Trailing shoe).

The direction of arrow between two shoe indicate leading or trailing shoe. arrow direction show the leading shoe direction between two shoe space.

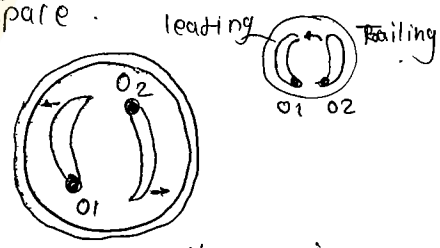

Both self energizing

NewtonDesk.com

DESIGN OF CLUTCHES

A clutches is used to connect or disconnect the source of power from the remaining part of power transmittion at the will of operator.

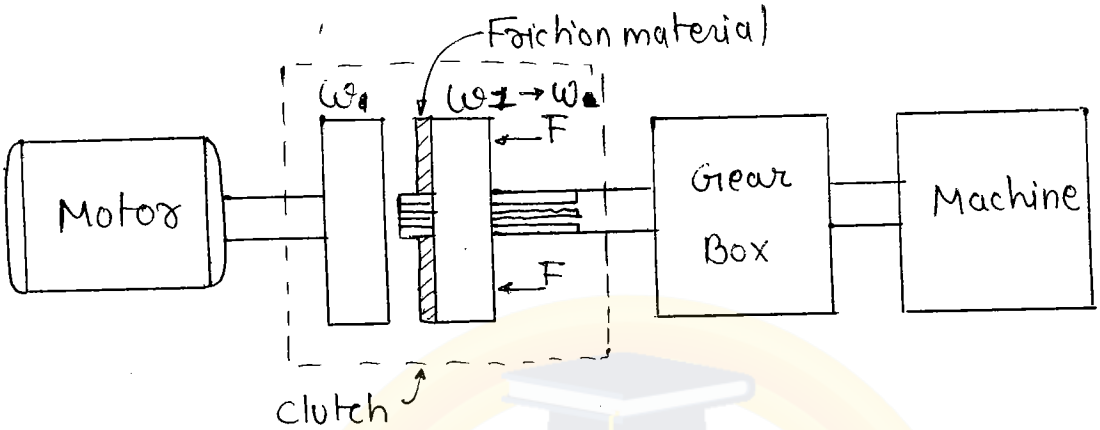

Amount of Heat generated (work done)

$$H_g = T \times \theta$$

$$\omega_2 = \omega_1 + \alpha t \leftarrow v = u + \alpha t$$

$$\omega = 0 + \alpha t$$

$$\alpha = \frac{\omega}{t}$$

$$F = m \cdot a$$

Torque

$$T = I\alpha$$

$$= I \times \frac{\omega}{t}$$

$$v^2 - u^2 = 2as$$

$$\omega^2 - 0^2 = 2 \times \frac{N}{t} \times \theta$$

$I = mk^2$ — k - Radius of gyration

$= \frac{D}{2}$ For a rimmed Flywheel

$= \frac{D}{2\sqrt{2}}$ For a solid disc

NewtonDesk.com

Types of clutches.

① Plate clutch
② Conical clutch
③ Centrifugal clutch.

Clutches → Friction → Friction force is used and there is slip.
→ Positive → No friction force is used and no slip.
↳ ① Squre Jaw clutch ② Spiral Jaw clutch.

1] → Plate clutch

① Single plate
Ex:- Used in tractors, Buses, lorries and cars.

② Multiplate clutch.
Ex:- Machine tools, two wheelers.

2] → Conical clutch
Ex:- Feed drives of m/c tool.

3] → Centrifugal clutch
Ex:- Mopeds, washing m/c, coal crushers.

→

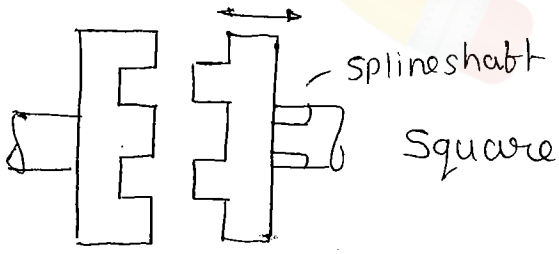

Square Jaw.

very slowspeed.

→

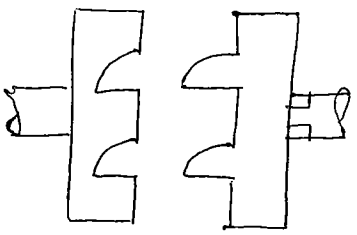

Spiral Jaw

Bit high speed we can use this clutch.

NewtonDesk.com

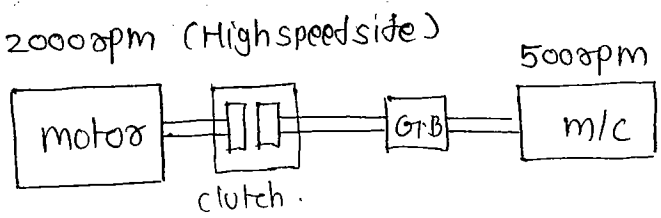

$P = \frac{2\pi NT}{60}$ $\quad P \propto NT$.

$N\uparrow \; T\downarrow$.

As we req. more torque if we place it after ~~the~~ G.B the size of the clutch will increase ($T \propto$ Radius of clutch) Hence we place clutch at high speed side ($N\uparrow \; T\downarrow$) which reduces the size of clutch.

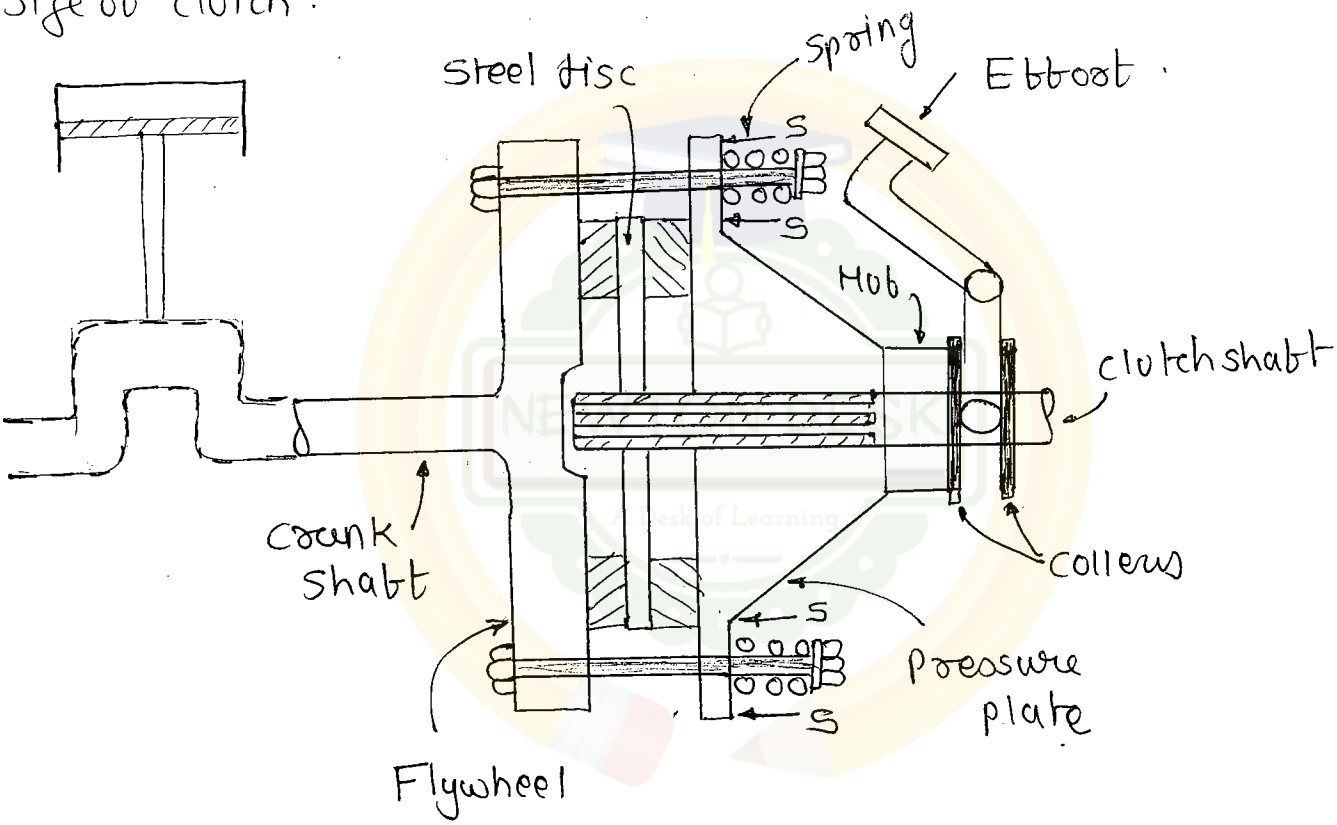

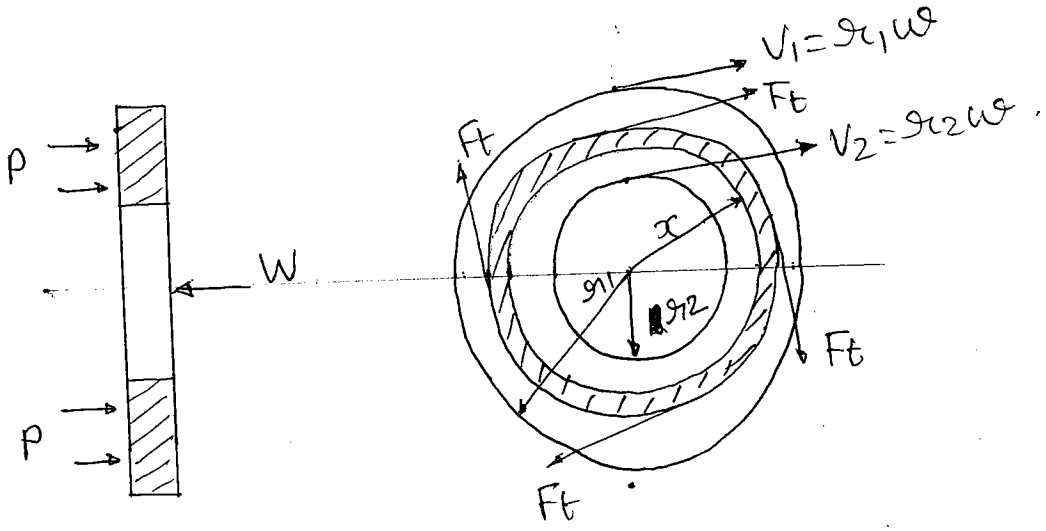

NewtonDesk.com

δw = Pressure x Area

$= p \times 2\pi x\, dx$

Friction Force

$\delta F = \mu \delta w$

$= \mu p \times 2\pi x\, dx$.

Torque

$\delta T = \delta F \times x$.

$= \mu p \times 2\pi x^2 dx$.

Pressure is not uniform or may be uniform according to clutch condition or wear position.

1] New clutch — Uniform pressure

$$T = \int_{r_1} \delta T$$

$$= \int_{r_2} \mu p 2\pi x^2 dx.$$

$$= \mu p 2\pi \left[x^2 dx\right]_{r_2}^{r_1}$$

$$= 2\mu p \pi \left[\frac{r_1^3 - r_2^3}{3}\right]$$

$$= 2\pi\mu p \left[\frac{r_1^3 - r_2^3}{3}\right].$$

If $\delta w = p\, 2\pi x\, dx$

$$W = \int_{r_1}^{r_2} p 2\pi x\, dx$$

$$W = p\pi \left[r_1^2 - r_2^2\right]$$

$$W = p\pi \left[r_1^2 - r_2^2\right]$$

$$p = \frac{W}{\pi\left[r_1^2 - r_2^2\right]}$$

$$= 2\cancel{\pi}\mu \times \frac{W}{\cancel{\pi}\left[r_1^2 - r_2^2\right]}\left[\frac{r_1^3 - r_2^3}{3}\right]$$

$$= \frac{2}{3}\mu W \left[\frac{r_1^3 - r_2^3}{r_1^2 - r_2^2}\right]$$

NewtonDesk.com

② Used clutches – Uniform wear.

(Heat generated) $H_g = T \times \theta$.

$$H_g/sec = T \times \frac{\theta}{time}$$

$$'' = T \times \omega$$

$$= \mu F \times r \times \omega$$

$$H_g/sec/mm^2 = \mu F v.$$

$$= \mu \times pressure \times velocity.$$

$$H_g/sec/mm^2 = \mu P v.$$

As $\quad wear \propto H_g/sec/mm^2$

$$\propto \mu P v$$

$$\propto P v$$

$\therefore$ If $Pv = constant$ wear is uniform.

$$Pv = constant$$

$$v = r\omega$$

$$= x\omega$$

$$v \propto x.$$

$$Px = constant.$$

$$P_1 r_1 = P_2 r_2 = constant$$

$$P_{min} r_{max} = P_{max} r_{min}$$

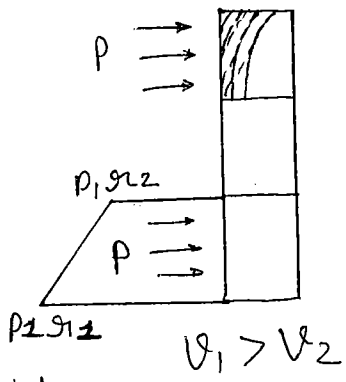

Initialy

$P_1 = P_2 \quad r_1 > r_2$

$P_1 r_1 > P_2 r_2$

After initial wear, wearing take place uniform

$P_1 r_1 = P_2 r_2 = C$

NewtonDesk.com

$$\delta T = \mu p 2\pi x^2 dx$$

$$T = \int_{r_2}^{r_1} \delta T$$

$$= \mu 2\pi \int_{r_2}^{r_1} p x^2 dx$$

$$= \mu 2\pi C \int_{r_2}^{r_1} x\, dx.$$

$$T = \mu 2\pi C \left\{ \frac{r_1^2 - r_2^2}{2} \right\}$$

$$\delta W = p \times 2\pi x\, dx.$$

$$\delta W = \frac{C}{\cancel{x}} 2\pi \cancel{x} dx$$

$$W = 2\pi C \int_{r_2}^{r_1} dx$$

$$C = \frac{W}{2\pi (r_1 - r_2)}$$

$$T = \mu \times \cancel{2\pi} \times \frac{W}{\cancel{2\pi}(r_1 - r_2)} \times \left[\frac{r_1^2 - r_2^2}{2} \right]$$

$$T = \mu W \left(\frac{r_1 + r_2}{2} \right).$$

$$T = \mu W r_m \qquad r_m = \frac{r_1 + r_2}{2}$$

$$T_{\text{uniform pres.}} = \frac{2}{3} \mu W \left[\frac{r_1^3 - r_2^3}{r_1^2 - r_2^2} \right]$$

$$T_{\text{uniform wear}} = \mu W \left(\frac{r_1 + r_2}{2} \right)$$

For shorter period of clutch like it subjected to uniform pr. after that its wear is uniform hence consider uniform wear when condition is not given

NewtonDesk.com

2.531

Uniform Pressure

$$T_{up} = \frac{2}{3}\mu W\left[\frac{r_1^3 - r_2^3}{r_1^2 - r_2^2}\right]$$

Uniform wear

$$T_{uw} = \mu W\left(\frac{r_1 + r_2}{2}\right)$$

$$T_{up} > T_{uw}.$$

$$(r_f)_{up} > (r_f)_{uw}.$$

$$\frac{2}{3}\left[\frac{r_1^3 - r_2^3}{r_1^2 - r_2^2}\right] > \frac{r_1 + r_2}{2}$$

Multiplate clutch.

$$T_{wear} = \mu W\left(\frac{r_1 + r_2}{2}\right) n$$

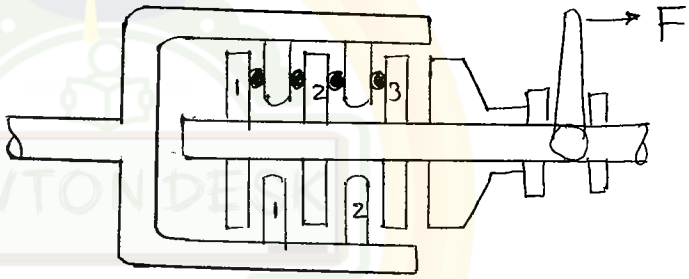

n = no. of pairs of surface in contact.

$= n_1 + n_2 - 1$

$= 3 + 2 - 1$

$= 4.$

Pno 76.

Q no 6 and 7

$r_f = 100\,mm$

$\mu = 0.1$

$N = \frac{600}{\pi}$ rpm

$W = 3\,kN$

$T_{up} = ?$

$P = ?$

$$T = \frac{2}{3}\mu W\left[\frac{r_1^3 - r_2^3}{r_1^2 - r_2^2}\right]$$

$= \mu W R_f.$

$= 0.1 \times 3 \times 100$

$= 30$ N-mm

$$P = \frac{2\pi N T}{60} = \frac{2\pi \times 600/\pi \times 30}{60}$$

$P = 600\,W.$

NewtonDesk.com

Pg no 77
Q no 12

$n_1 = 5$.
$n = n_1 - 1 = 4$.
$T = 0.4$ kN-m
$= 0.4 \times 10^3$ N-m
$\mu = 0.5$
$r_1 = 150$ mm
$r_2 = \frac{200}{2}$ mm $= 100$ mm
load/spring.

$$T = \mu W \left(\frac{r_1 + r_2}{2}\right) n$$

$$0.4 \times 10^3 = 0.5 \times W \left(\frac{150 \times 10^{-3} + 100 \times 10^{-3}}{2}\right) 4$$

$$W = \frac{0.4 \times 10^3}{0.35}$$

$$W = \frac{\cancel{1142.85}}{1600} \text{ N}.$$

$$\frac{\text{load}}{\text{spring}} = \frac{W}{\text{no. of spring}} = \frac{W}{4} = 400 \text{ N}.$$

Cone / Conical Clutch.

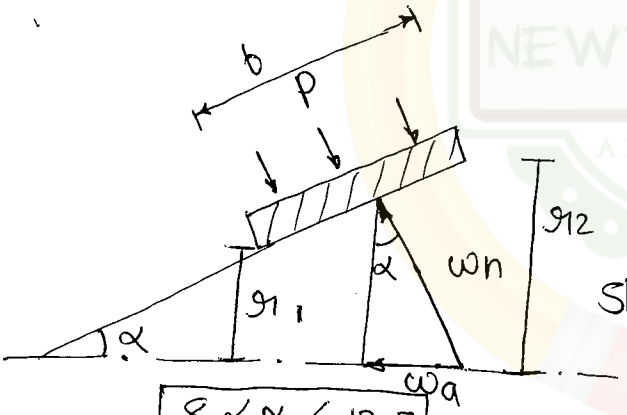

$\boxed{8 < \alpha < 12.5}$ Smaller value of α - leads to grabbing or self locking

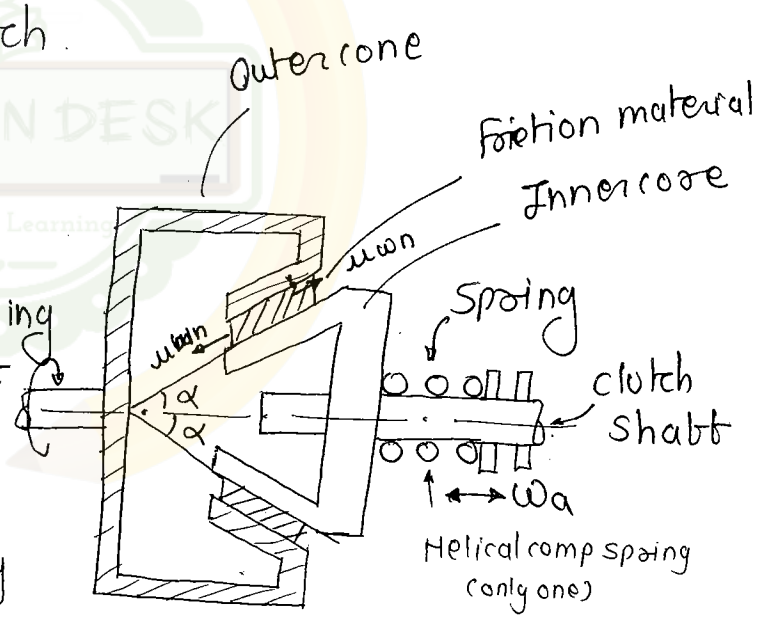

→ Uniform pressure

$$T = \frac{2}{3} \mu W_n \left[\frac{r_1^3 - r_2^3}{r_1^2 - r_2^2}\right]$$

$$= \frac{2}{3} \mu \frac{W_n}{\sin\alpha} \left[\frac{r_1^3 - r_2^3}{r_1^2 - r_2^2}\right]$$

→ Uniform wear

$$T = \mu W_n \left(\frac{r_1 + r_2}{2}\right) =$$

$$= \mu W_n (r_1 + r_2)$$

NewtonDesk.com

$$\sin\alpha = \frac{r_1 - r_2}{b}.$$

$$\sin\alpha = \frac{W_a}{W_n}$$

$$W_a = W_n \sin\alpha.$$

W_a = Axial force applied during running.

$$T \propto \frac{1}{\sin\alpha}.$$

$\alpha \downarrow$ $\sin\alpha \downarrow$ $T \uparrow$ .....

Note -

① Driver and driven shaft must be co linear otherewise uneven wear take place.

②. Only one spring is used to balance the Force even at reduced stiffness.

Axial force required to engauge the clutch.

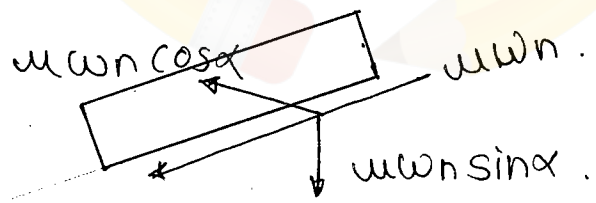

$$W_{ae} = W_a + \mu W_n \cos\alpha.$$

$$= W_n \sin\alpha + \mu W_n \cos\alpha$$

$$W_{ae} = W_n (\sin\alpha + \mu \cos\alpha)$$

NewtonDesk.com

Pg no 77

Q 13 to 14.

$P = 20 kW$

$N = 1000 rpm$

$r_b = \frac{r_1 + r_2}{2} = 150 mm$

$2\alpha = 24^\circ$

$\alpha = 12^\circ$

$\mu = 0.2$

$p = 70 \times 10^3 N/m^2$

$W_{ae} = W_n (\sin\alpha + \mu \cos\alpha)$

$= 6366.19 (\sin 12 + 0.2 \cos 12)$

$W_{ae} = 2569.023$

$= 2.56 kN.$ Ans b]

$T = \mu W_n r_b$

$= 0.2 \times W_n \times 150 \times 10^{-3}$ —①

$P = \frac{2\pi N T}{60}$

$T = \frac{P \times 60}{2\pi N}$ —②

① = ②

$0.2 \times W_n \times 150 \times 10^{-3} = \frac{20 \times 10^3 \times 60}{2 \times \pi \times 1000}$

$W_n = 6366.19 N.$

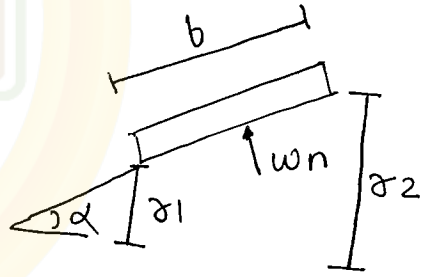

$r_b = r = \frac{r_1 + r_2}{2}.$

$\text{Pressure} = \frac{\text{Normal force}}{\text{mean area of surface}}$

$= \frac{W_n}{2\pi r_b}.$

$70 \times 10^3 = \frac{6366.19}{2\pi \times 150 \times 10^{-3} \times b}$

$b = 0.0964 m.$

$b = 96.49 mm$

Ans b]

NewtonDesk.com

Pg no 79

Q 38

$T_f = 140\,Nm$ $\qquad$ $\cancel{T_f = (T_1 - T_2)R}$.

$\frac{T_1}{T_2} = e^{\mu\theta}$ $\qquad$ $\cancel{140 = (T_2 K - T_2) R}$

$\cancel{140 = T_2 (K-1) R}$.

$\frac{T_1}{T_2} = e^{0.2 \times \theta}$

$\cancel{T_1 = K T_2}$. $\qquad$ —x—

$$T = \mu \omega \left(\frac{r_1 + r_2}{2}\right) = \mu \times 2\pi C (r_1 - r_2) \times \left(\frac{r_1 + r_2}{2}\right)$$

~~(case 1)~~ 27.

$$C = P_{max} r_{min} = P_{min} r_{max}.$$

$$= P_{max} r_2 = P_{min} \times r_1$$

$$T = \mu \times \cancel{2}\pi \times P_{max} r_2 \left(\frac{r_1^2 - r_2^2}{\cancel{2}}\right)$$

$$= \mu \pi P_{max} r_2 (r_1^2 - r_2^2)$$

(case 1) $OD = 220mm$, $ID = 150mm$, $P_{max} = 0.25\,MPa$ $\mu = 0.3$

$$T_f = 0.3 \times \pi \times 0.25 \times \frac{150}{2} \left(\left(\frac{220}{2}\right)^2 - \left(\frac{150}{2}\right)^2\right)$$

$$= 114.42 \times 10^3\,N\text{-}mm$$

$$= 114.42\,N\text{-}m < T$$

not ~~suta~~ recomended

(case 2] $OD = 250mm$, $OD = 150$, $P_{max} = 0.21\,MPa$ $\mu = 0.3$

$T_f = 148\,N\text{-}M > T$ recommented (very good)

(case 3] $OD = 275mm$, $OD = 150mm$, $P_{max} = 0.185$ $\mu = 0.3$

$T_f = 172\,N\text{-}m > T$ recommented

NewtonDesk.com

Centrifugal Clutch.

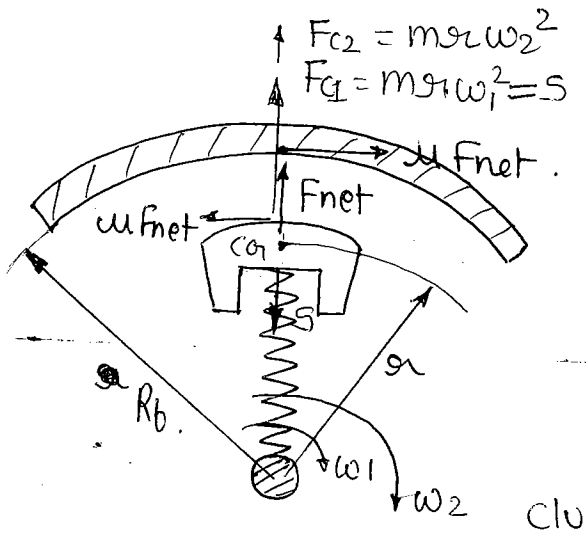

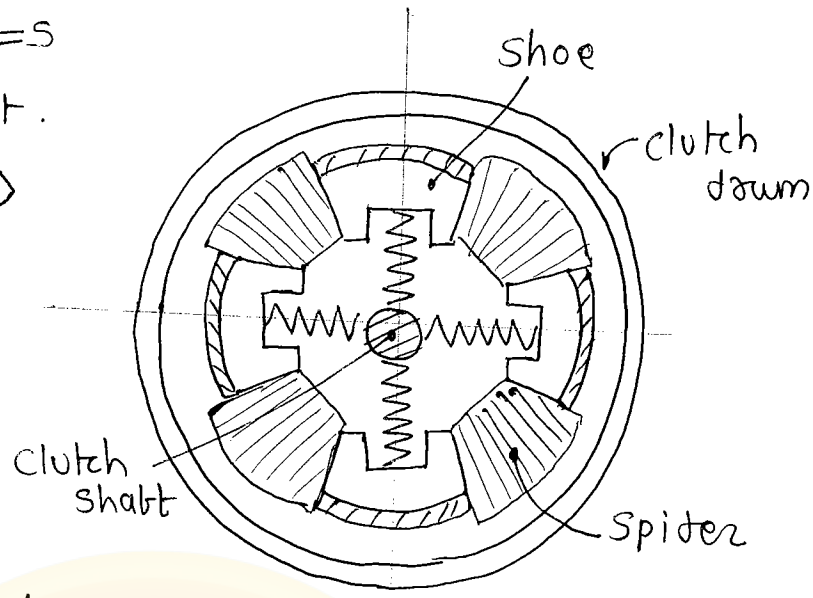

Provides time delay between starting of an engine and engagement of load

μ = coeff of friction

m = mass of each shoe

ω_1 = engageing speed

ω_2 = running speed

r = distance between center of shaft to C.G of mass

R_b = Inner radius of clutch drum.

$$F_{net} = F_{c2} - S$$
$$= F_{c2} - F_{c1}$$
$$= mr(\omega_2^2 - \omega_1^2)$$

Torque

$$T = \text{Friction force} \times \text{radius}$$
$$= \mu F_{net} \times R_b$$
$$= \mu \times mr(\omega_2^2 - \omega_1^2) \times R_b \times n$$

n = no. of shoes.

NewtonDesk.com

Pg no 78

Q. no 28

$T = 255\ N\text{-}m$

$n = 4$

$\mu = 0.35$

$R_f = \frac{330}{2} = 165.$

$r = 140\ mm.$

$\omega_2 = 80\ rad/sec$

$\omega_1 = 60\ rad/sec$

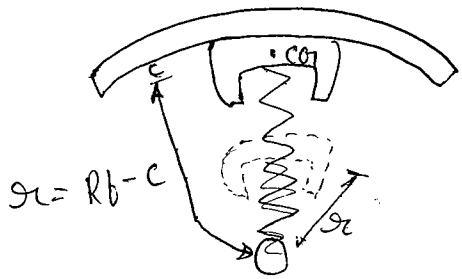

$F_c = m r \omega_1^2$

$F_{c2} = m r \omega_2^2$

$r >>>>> c$

$$T = \mu m r (\omega_2^2 - \omega_1^2) \times R_f \times n$$

$$255 = 0.35 \times m \times 140 \times 10^{-3} (80^2 - 60^2) \times 165 \times 10^{-3} \times 4$$

$$\boxed{m = 2.48\ kg}$$

NewtonDesk.com

GEARS

A gear is a toothed wheel used to transmit power at constant angular velocity ratio.

$P = \frac{2\pi NT}{60}$ — Positive Drive (No slip)
— Short center distance.

$P \propto NT$.

$N \downarrow T \uparrow$

Types of Gears.

1] Spur gear

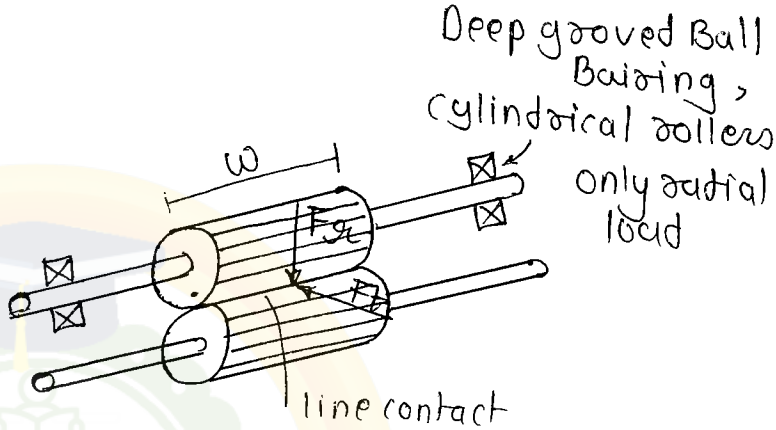

① Tooth are cut parallel to axis
② Joins coplaner, parallel shaft.
③ Line contact, sudden engagement and disengagement
④ Only radial loads.
⑤ Velocity ratio 3 : 1 to 6 : 1

2] Helical gear

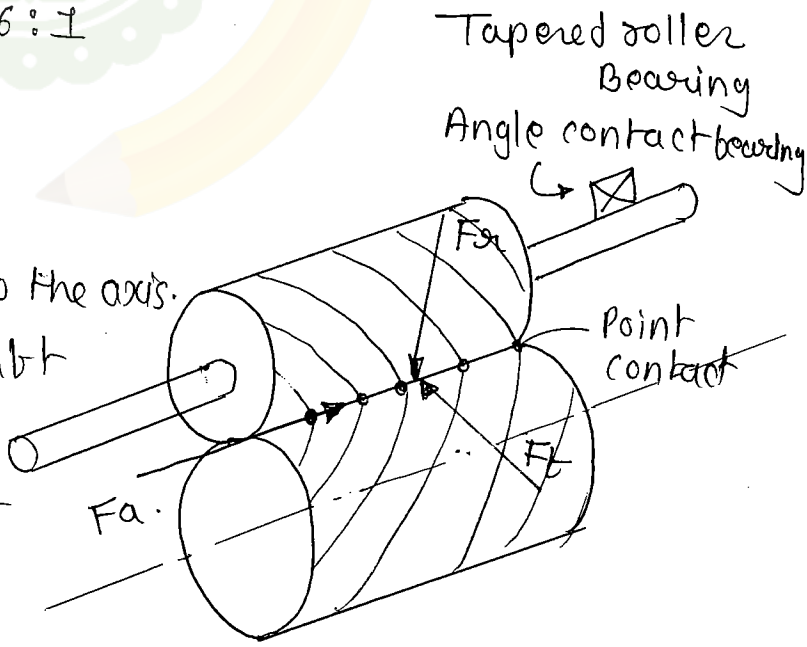

- Tooth are cut at an angle to the axis.
- Joins coplaner parallel shaft
- Initially point contact but gradually become line contact
- Velocity ratio 6:1 to 10:1
- loads both axial and radial

NewtonDesk.com

2] Herringbone gears.

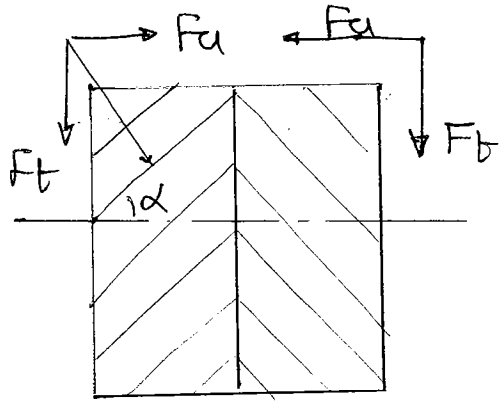

axial Force = 0.

3] Spiral gear / crossed helical gear.

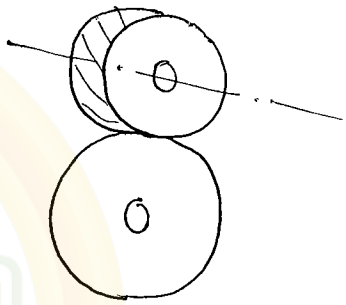

- Joins non-coplenar and non intersecting shafts (skew shaft)
- Always point contact.
- Suitable for light loads.

4]

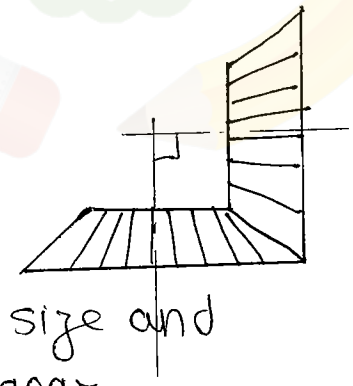

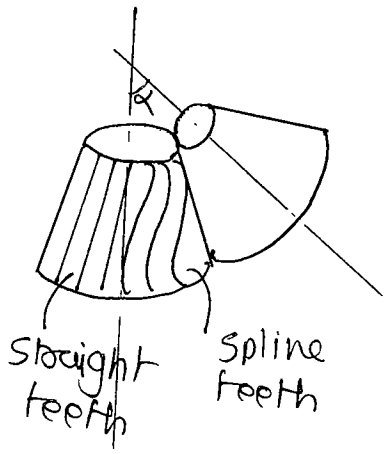

- Transmit power at angle
- Radial and axial loads
- Two bevel gear of equal size and at 90° are called mitre gear
- A line contact.

NewtonDesk.com

5] Worm gear

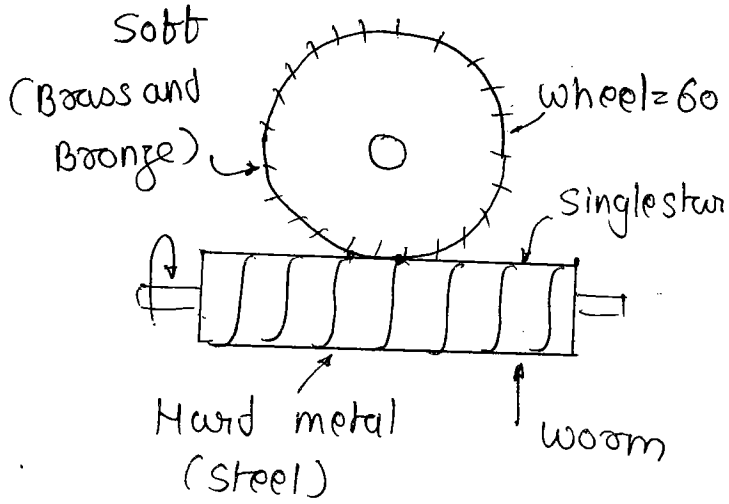

- Velocity ratio
  $= \frac{1}{\text{No of teeth of wheel}}$
- Skew shaft
- Velocity ratio upto 100 : 1.
- Initially point contact than line contact.

SPUR GEAR.

Gear Nomenclature.

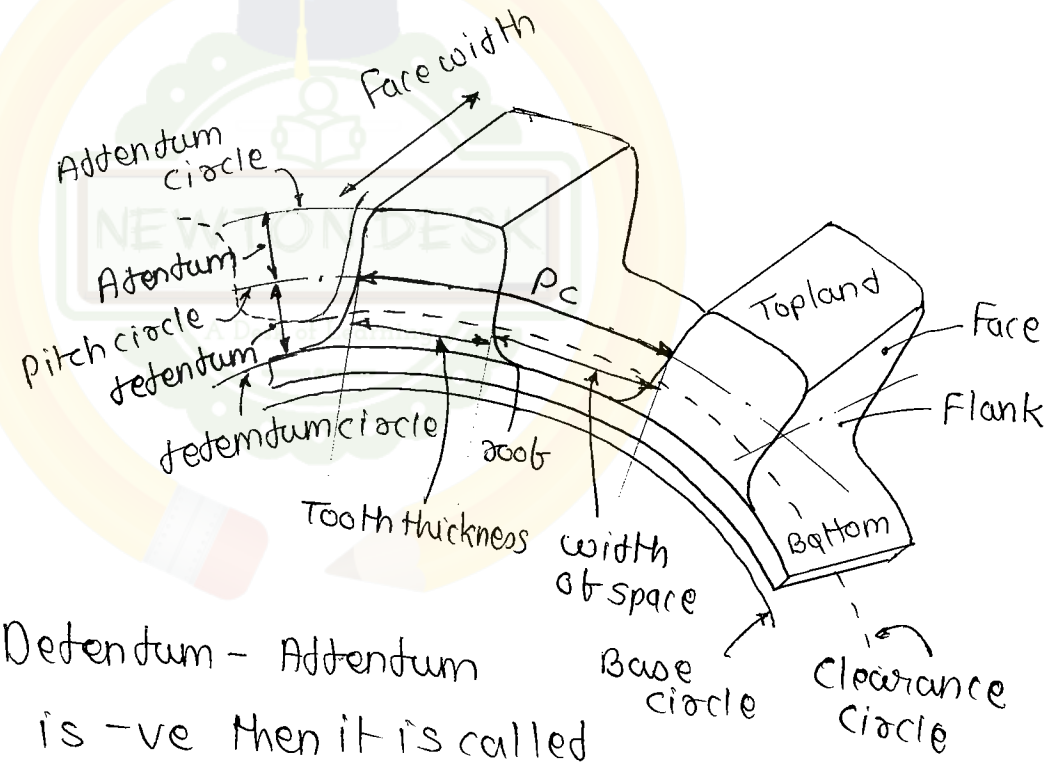

Clearance = Dedendum − Addendum

If clearance is −ve then it is called interference.

NewtonDesk.com

Backlash

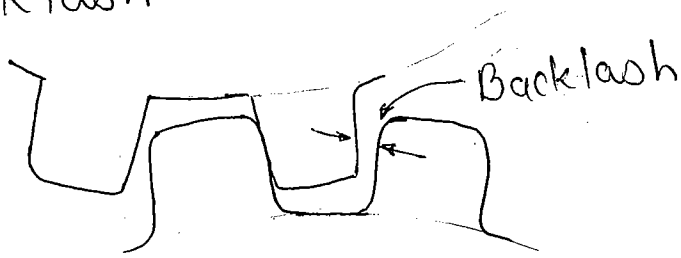

Back lash
= Width of space − tooth thickness

Law of gearing.

The common normal at the point of contact always passes through a fixed point on the line joining centers and devides the line joining centers in the inverse ratio of thier angular velocities.

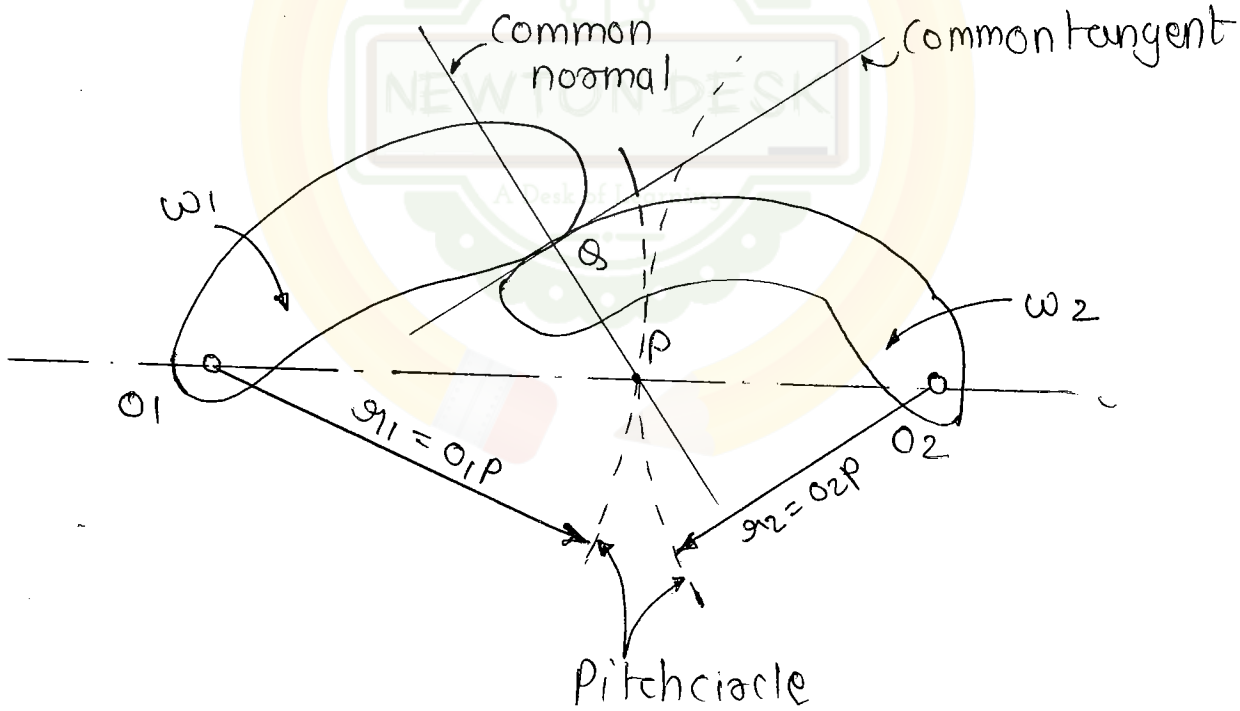

$$\frac{\omega_1}{\omega_2} = \frac{r_2}{r_1} = \frac{O_2P}{O_1P}$$

Pitch line velocity, $V = r_1\omega_1 = r_2\omega_2$

NewtonDesk.com

Conjugate Problem → (Involute, cycloid).

- Satisfy low of gearing.
- Maintain constant angular velocity ratio.

Involute.

The locus of a point on a straight line which rolls without slipping on a circle is called involute circle is called base circle.

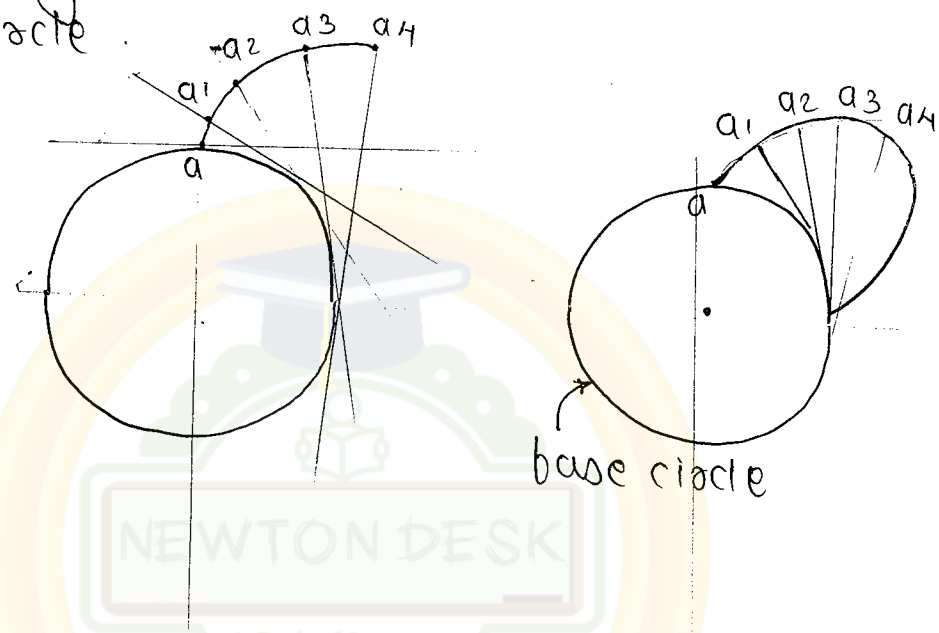

Cycloid

The locus of a point on a circle which rolls without slipping on a straight line is called cycloid.

- More strength.
- zero interbarence.
- Less ware.
- Difficult to cut.

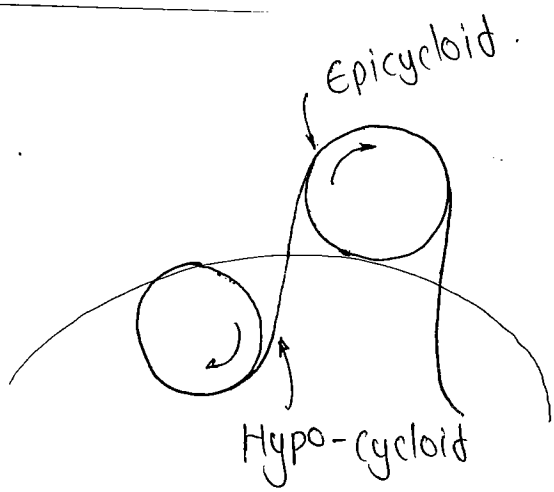

NewtonDesk.com

Advantages of involute

1] Conjugate in action

2] Constant pressure angle (ϕ)

(Pressure angle is zero at the pitch point and is maximum at tips for cycloid)

3] Small variation in the center distance will not effect velocity ratio.

4] Easy to manufacture.

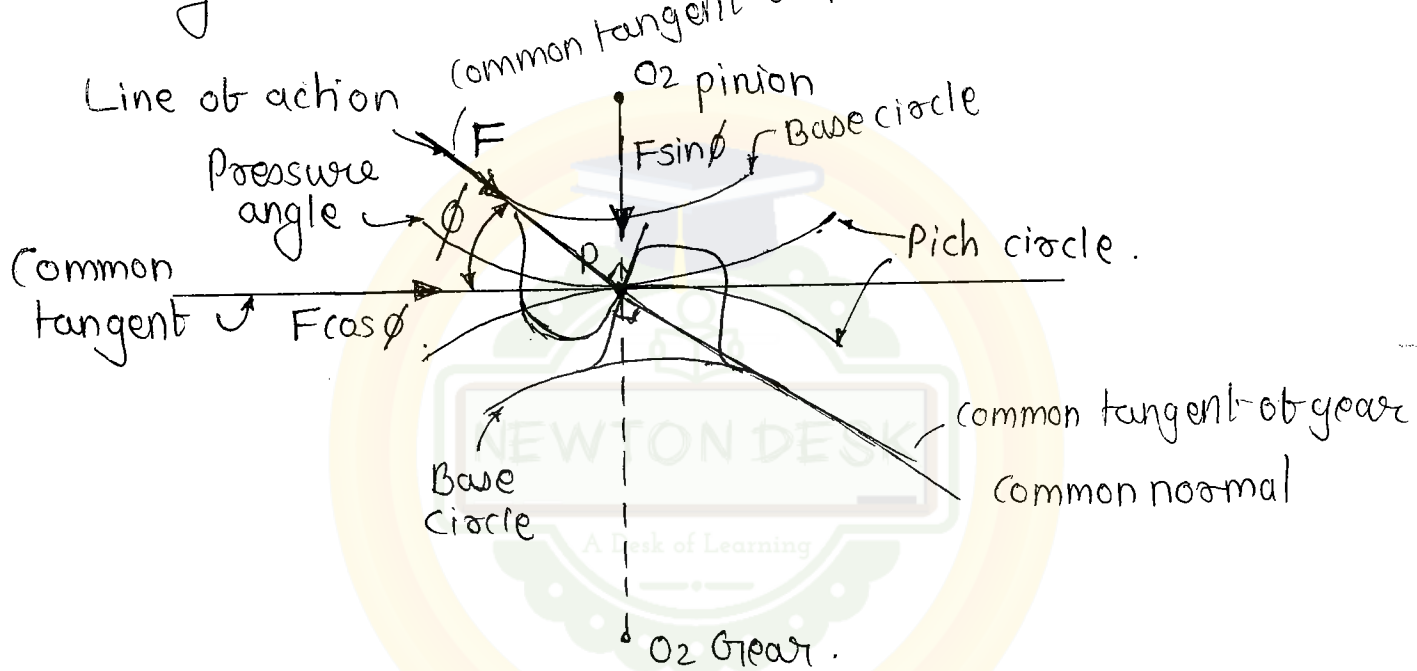

Pressure angle (ϕ)

- Angle between common normal and common tangent
- Angle between common tangent to base circle and common tangent to pich circle
- Angle betn line of action and common tangent is pressure angle.

$F_t = F\cos\phi$

$F_R = F\sin\phi$

$\phi = 14\frac{1}{2}$ obsolute

$= 20°$ – widely used

$= 25°$

Torque, $T = F_t \times R$

$T\uparrow \; F_t\uparrow \; \cos\phi\uparrow \; \phi\downarrow$

NewtonDesk.com

$F_R = F\sin\phi$

$F_R \downarrow \quad \sin\phi \downarrow \quad \phi \downarrow$

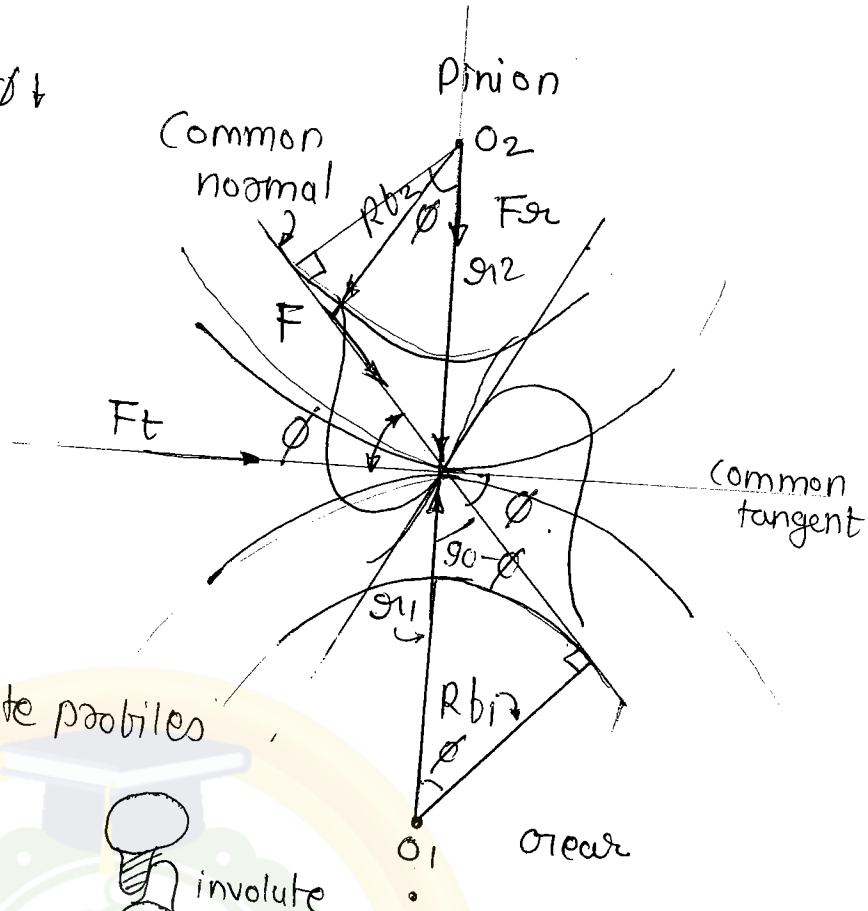

Interference

① Negative clearance

② Meshing of non conjugate profiles

velocity ratio in not constant

Constant velocity

$F_t = F\cos\phi$

$\phi \downarrow \quad F_t \uparrow$

$r_b = r\cos\phi$

$r_b \quad \phi \uparrow \quad \cos\phi \downarrow$

we cant give or put $\phi = 0$

then $\boxed{r_b = r}$ then profile

become

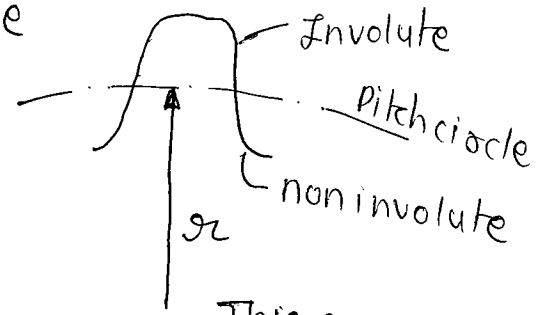

$\phi = 20^\circ$

$r_b = r\cos 20^\circ$

$r_b = 0.939r$

This cause Interference hence velocity ratio is not constant

NewtonDesk.com

If $\phi = c$

③ Small variation in the center distance doesnot change V.R

$$V = \frac{\pi d_1 N_1}{60} = \frac{\pi d_2 N_2}{60}$$

$$V.R = \frac{N_2}{N_1} = \frac{d_1}{d_2} = \frac{r_1}{r_2}$$

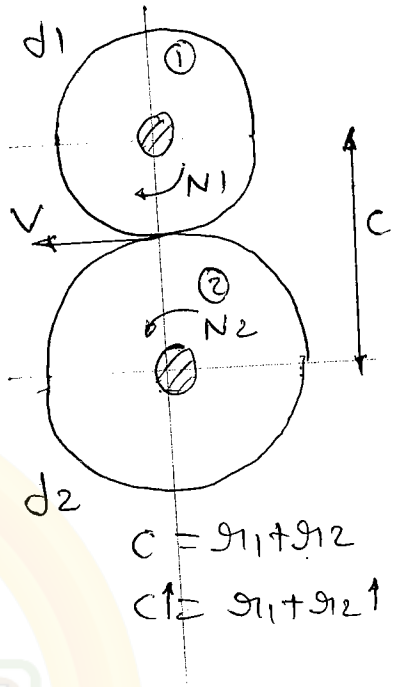

Ex:- C = 100mm - design

but actual assembly time

C = 98 mm

Gear System

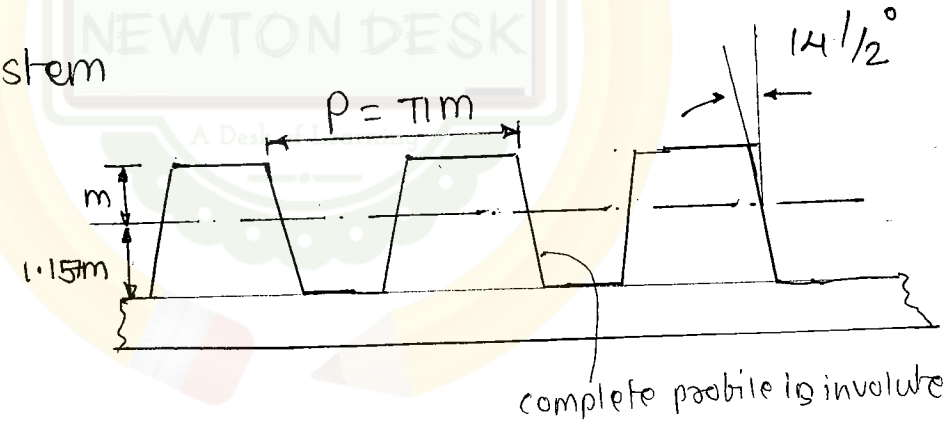

① 14 1/2 Full depth involute

② → Pitch of gear

① Diametral pitch, $P_d = \frac{\text{No. of teeth}}{\text{Pitch circle dia.}} = \frac{T}{D}$ is difficult

② Circular pitch, $P = \frac{\pi D}{T}$ difficult to express

D - Pitch circle dia

T - no. of teeth

③ Module, $m = \frac{D}{T}$ mm

$= \frac{1}{P_d}$

NewtonDesk.com

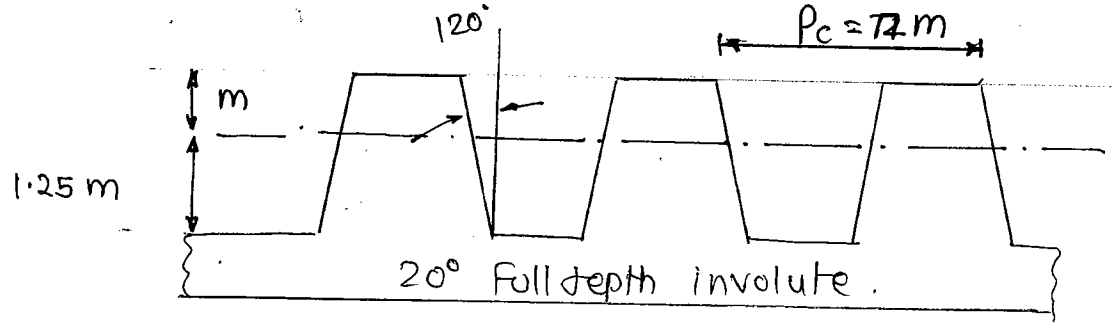

① 1¼ Full depth involute

Total depth = Addendum + Dedendum

= m + 1.25m = 2.25m

working depth = addendum + addendum

= 2m

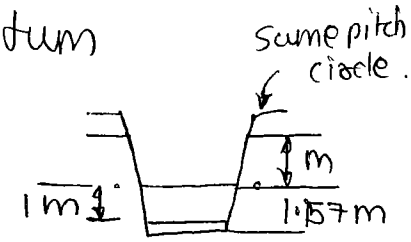

clearance, e = 1.57m − 1m = 0.157 m.

② 1¼ Composite teeth.

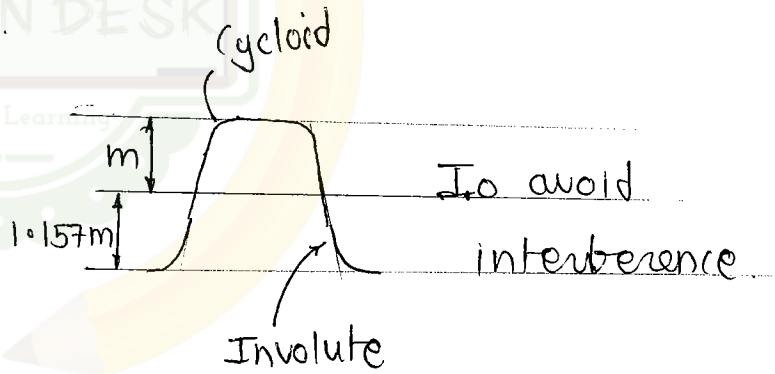

③ 20° Full depth involute

only clearance = 0.25m

④ 20° Stub involute

To reduce the bending stress because of high tooth hight in 20° Full depth we use 20° stub involute.

there is hight, limit to maintain the contact surface.

= 1 − 0.8

Clearance = 0.2 m

working depth = 1.8 m

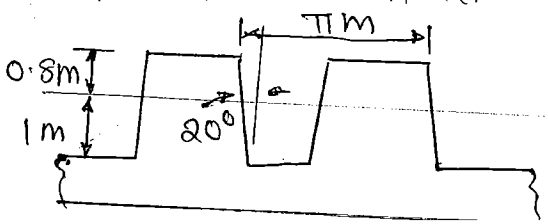

NewtonDesk.com

To avoid interference the minimum no of teeth on pinion

$$T_{min} = \frac{2}{\sin^2\phi}$$

For $14\frac{1}{2}^\circ \rightarrow T_{min} = 31.9$
≈ 32

$20^\circ \rightarrow T_{min} = 17.09$
≈ 18

$25^\circ, \rightarrow T_{min} = 12$.

Tooth thickness

$$t = \frac{P_c}{2} = \frac{\pi m}{2} = \frac{\pi}{2} \times \frac{D}{T}.$$

$$t = \frac{\pi D}{2T}$$

$t \uparrow \; T \downarrow \; \phi \uparrow$ . . . . . $T_{min} = \frac{2}{\sin\phi}$

NewtonDesk.com

NewtonDesk.com

NewtonDesk.com

6-9- pf
9.30-1- MD
English
HT.

***
SAJIT CHINTAMAKAR
Accepted that
404
NOT FALL IN LOVE WITH
ANY GIRL IN LIFE
I HATE GIRLS*
*** I LOVE BOYS ONLY
Sajit
3/6/2012
8:10 AM

NewtonDesk.com

Dhanyawadam - Thanks.

Anshul.
9028372813

① Ni peranti - wats your name?

Adhi ② Nawa pen - My pen

③ Dinerate - How maths the cost

④ Bhagunnara - How you are fine

⑤ Mi ekkada untanu - where are you living

⑥ Mitho Frendship chayacha. - I want to be your friend.

⑦ Meru a collegelo chatu vu - thunna vu.

6-9 - Calculus

9.30-1 - M-S

2-3.30 - Production

6-9.30 thermal

$$\tau = \frac{P\sin\theta(\cos\theta + \sin\theta)}{sl}$$

$$\frac{\partial \tau}{\partial \theta} = 0$$

$$\frac{\partial}{\partial \theta}(\sin\theta(\cos\theta + \sin\theta))$$

6-9 - PJ

9-11 - TM

2-5.30 - TOM

6-PI - PJ

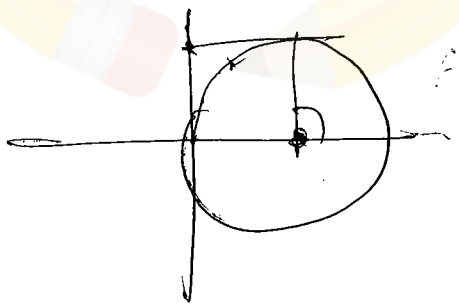

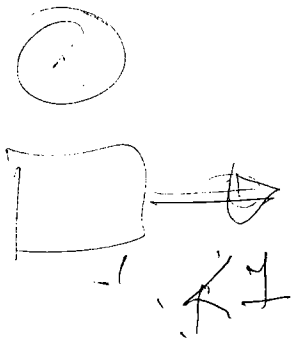

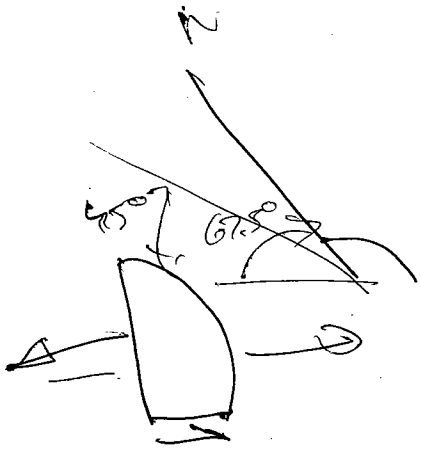

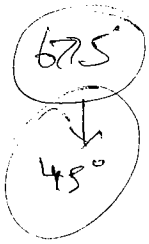

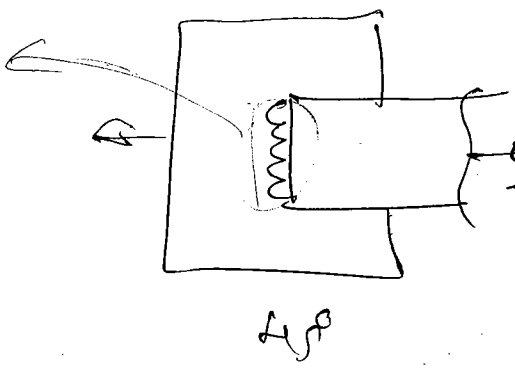

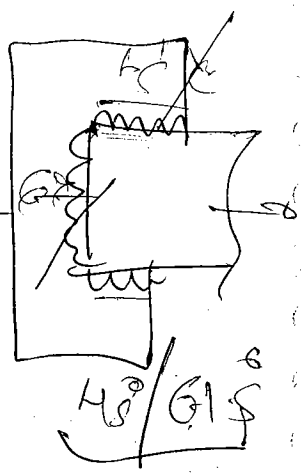

NewtonDesk.com